SHRI PARVATI INDUSTRIES - FLANGE METRIC REFERENCE

ANSI dimensional table values converted from inches to millimetres.

Conversion: 1 inch = 25.4 mm. Values rounded to 0.01 mm.

NPS labels, bolt-hole counts and source weight values are NOT multiplied.

This is unit conversion of rounded source values, not official ASME metric dimensions.

JIS / DIN / EN / BS tables already in mm remain unchanged.

Diagrams retain source notation; fractional callouts have a metric legend.

CHECK means an ambiguous or questionable source cell: confirm before procurement.

Blank / dash entries and buyer-specified bores do not imply availability.

Use the required standard edition and approved project drawing.

Source rounding, errors, grades, ratings and supply scope are not certified here.

Click a section below, or use the Bookmarks panel:

ANSI Flanges | JIS Flanges | DIN Flanges | EN 1092-1 Flanges | BS Flanges

SHRI PARVATI INDUSTRIES

ANSI FLANGES

Dimensional reference tables

ANSI / JIS / DIN / EN 1092-1 / BS

Reference data from the supplied technical catalogue.

Verify dimensions against the specified standard edition and approved project drawing before procurement.

This reference is not a declaration of stocked sizes, material grades or service suitability.

Dimensions, drawings, units and technical footnotes on the following table pages have been preserved.

ANSI B16.5 Class 150 Flanges - mm

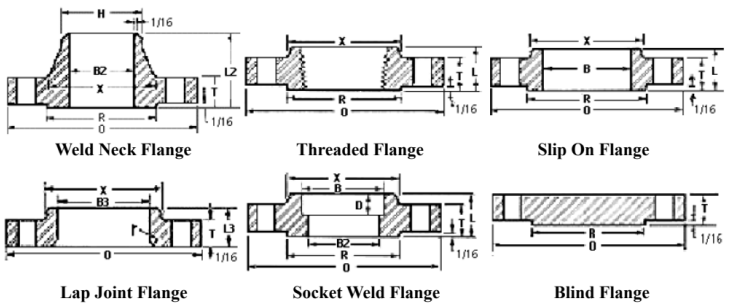

Dimensions: mm | NPS labels unchanged | Hole entries: count x diameter (mm) | Source page 3

NPS	O	T	R	X	Holes	Bolt circle	L2	H	B2	L	B	r	L3	B3	D
1/2	88.90	11.18	35.05	30.23	4 x 15.75	60.45	47.75	21.34	15.75	15.75	22.35	3.05	15.75	22.86	9.65
3/4	98.55	12.70	42.93	38.10	4 x 15.75	69.85	52.32	26.67	20.83	15.75	27.69	3.05	15.75	28.19	11.18
1	107.95	14.22	50.80	49.28	4 x 15.75	79.25	55.63	33.53	26.67	17.53	34.54	3.05	17.53	35.05	12.70
1-1/4	117.35	15.75	63.50	58.67	4 x 15.75	88.90	57.15	42.16	35.05	20.57	43.18	4.83	20.57	43.69	14.22
1-1/2	127.00	17.27	73.15	65.02	4 x 15.75	98.55	61.98	48.26	40.89	22.35	49.53	6.35	22.35	50.04	15.75
2	152.40	19.05	91.95	77.72	4 x 19.05	120.65	63.50	60.45	52.58	25.40	61.98	7.87	25.40	62.48	17.53
2-1/2	177.80	22.35	104.65	90.42	4 x 19.05	139.70	69.85	73.15	62.74	28.45	74.68	7.87	28.45	75.44	19.05
3	190.50	23.88	127.00	107.95	4 x 19.05	152.40	69.85	88.90	77.98	30.23	90.68	9.65	30.23	91.44	20.57
3-1/2	215.90	23.88	139.70	122.17	8 x 19.05	177.80	71.37	101.60	90.17	31.75	103.38	9.65	31.75	104.14	22.35
4	228.60	23.88	157.23	134.87	8 x 19.05	190.50	76.20	114.30	102.36	33.27	116.08	11.18	33.27	116.84	23.88
5	254.00	23.88	185.67	163.58	8 x 22.35	215.90	88.90	141.22	128.27	36.58	143.76	11.18	36.58	144.53	23.88
6	279.40	25.40	215.90	192.02	8 x 22.35	241.30	88.90	168.40	154.18	39.62	170.69	12.70	39.62	171.45	26.92
8	342.90	28.45	269.75	246.13	8 x 22.35	298.45	101.60	219.20	202.69	44.45	221.49	12.70	44.45	222.25	31.75
10	406.40	30.23	323.85	304.80	12 x 25.40	361.95	101.60	273.05	254.51	49.28	276.35	12.70	49.28	277.37	33.27
12	482.60	31.75	381.00	365.25	12 x 25.40	431.80	114.30	323.85	304.80	55.63	327.15	12.70	55.63	328.17	39.62
14	533.40	35.05	412.75	400.05	12 x 28.45	476.25	127.00	355.60	336.55	57.15	359.16	12.70	79.25	360.17	41.40
16	596.90	36.58	469.90	457.20	16 x 28.45	539.75	127.00	406.40	387.35	63.50	410.46	12.70	87.38	411.23	44.45
18	635.00	39.62	533.40	504.95	16 x 31.75	577.85	139.70	457.20	438.15	68.33	461.77	12.70	96.77	462.28	49.28
20	698.50	42.93	584.20	558.80	20 x 31.75	635.00	144.53	508.00	488.95	73.15	513.08	12.70	103.12	514.35	54.10
22	749.30	45.97	641.35	615.95	20 x 35.05	692.15	149.35	558.80	539.75	79.50	564.39	12.70	107.95	565.15	60.45
24	812.80	47.75	692.15	663.45	20 x 35.05	749.30	152.40	609.60	590.55	82.55	615.95	12.70	111.25	615.95	63.50

Converted from rounded source inch values; NOT a DIN/EN substitution or certified ASME metric table.
Diagram callouts: 1/16 in = 1.5875 mm; 1/8 in = 3.175 mm; 1/4 in = 6.35 mm. NPS is a nominal label.
CHECK = confirm ambiguous source cell. By buyer / dash = not specified. Confirm approved drawing before ordering.

ANSI B16.5 Class 300 Flanges - mm

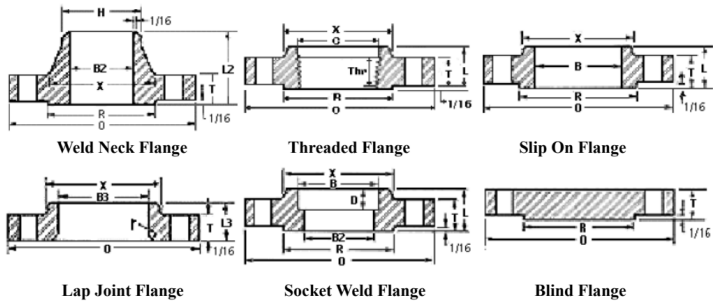

Dimensions: mm | NPS labels unchanged | Hole entries: count x diameter (mm) | Source page 4

NPS	O	T	R	X	Holes	Bolt circle	L2	H	B2	L	B	r	L3	B3	D	C	THr
1/2	95.25	14.22	35.05	CHECK	4 x 15.75	66.55	52.32	21.34	15.75	22.35	22.35	3.05	22.35	22.86	9.65	23.62	15.75
3/4	117.35	15.75	42.93	47.75	4 x 19.05	82.55	57.15	26.67	20.83	25.40	27.69	3.05	25.40	28.19	11.18	28.96	15.75
1	123.95	17.53	50.80	53.85	4 x 19.05	88.90	61.98	33.53	26.67	26.92	34.54	3.05	26.92	35.05	12.70	35.81	17.53
1-1/4	133.35	19.05	63.50	63.50	4 x 19.05	98.55	65.02	42.16	35.05	26.92	43.18	4.83	26.92	43.69	14.22	44.45	20.57
1-1/2	155.45	20.57	73.15	69.85	4 x 22.35	114.30	68.33	48.26	40.89	30.23	49.53	6.35	30.23	50.04	15.75	50.55	22.35
2	165.10	22.35	91.95	84.07	8 x 19.05	127.00	69.85	60.45	52.58	33.27	61.98	7.87	33.27	62.48	17.53	63.50	28.45
2-1/2	190.50	25.40	104.65	100.08	8 x 22.35	149.35	76.20	73.15	62.74	38.10	74.68	7.87	38.10	75.44	19.05	76.20	31.75
3	209.55	28.45	127.00	117.35	8 x 22.35	168.15	79.25	88.90	77.98	42.93	90.68	9.65	42.93	91.44	20.57	92.20	31.75
3-1/2	228.60	30.23	139.70	133.35	8 x 22.35	184.15	81.03	101.60	90.17	44.45	103.38	9.65	44.45	104.14	-	104.90	36.58
4	254.00	31.75	157.23	146.05	8 x 22.35	200.15	85.85	114.30	102.36	47.75	116.08	11.18	47.75	116.84	-	117.60	36.58
5	279.40	35.05	185.67	177.80	8 x 22.35	234.95	98.55	141.22	128.27	50.80	143.76	11.18	50.80	144.53	-	144.53	42.93
6	317.50	36.58	215.90	206.25	12 x 22.35	269.75	98.55	168.40	154.18	52.32	170.69	12.70	52.32	171.45	-	171.45	45.97
8	381.00	41.15	269.75	260.35	12 x 25.40	330.20	111.25	219.20	202.69	61.98	221.49	12.70	61.98	222.25	-	222.25	50.80
10	444.50	47.75	323.85	320.55	16 x 28.45	387.35	117.35	273.05	254.51	66.55	276.35	12.70	95.25	277.37	-	276.35	55.63
12	520.70	50.80	381.00	374.65	16 x 31.75	450.85	130.05	323.85	304.80	73.15	327.15	12.70	101.60	328.17	-	328.68	60.45
14	584.20	53.85	412.75	425.45	20 x 31.75	514.35	142.75	355.60	336.55	76.20	359.16	12.70	111.25	360.17	-	360.43	63.50
16	647.70	57.15	469.90	482.60	20 x 35.05	571.50	146.05	406.40	387.35	82.55	410.46	12.70	120.65	411.23	-	411.23	68.33
18	711.20	60.45	533.40	533.40	24 x 35.05	628.65	158.75	457.20	438.15	88.90	461.77	12.70	130.05	462.28	-	462.03	69.85
20	774.70	63.50	584.20	587.25	24 x 35.05	685.80	162.05	508.00	488.95	95.25	513.08	12.70	139.70	514.35	-	512.83	73.15
22	838.20	66.80	641.35	641.35	24 x 41.40	742.95	165.10	558.80	539.75	101.60	564.39	12.70	146.05	565.15	-	563.63	79.50
24	914.40	69.85	692.15	701.55	24 x 41.15	812.80	168.15	609.60	590.55	106.43	615.95	12.70	152.40	615.95	-	614.43	82.55

Converted from rounded source inch values; NOT a DIN/EN substitution or certified ASME metric table.
Diagram callouts: 1/16 in = 1.5875 mm; 1/8 in = 3.175 mm; 1/4 in = 6.35 mm. NPS is a nominal label.
CHECK = confirm ambiguous source cell. By buyer / dash = not specified. Confirm approved drawing before ordering.

ANSI B16.5 Class 400 Flanges - mm

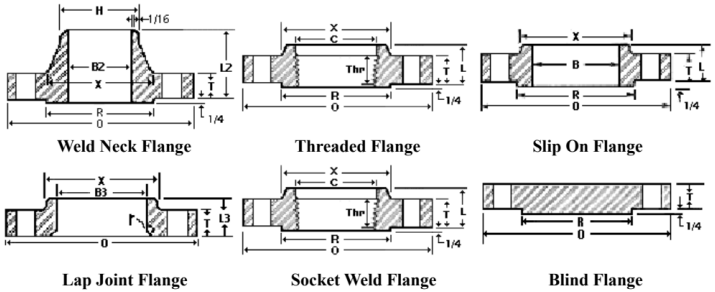

Dimensions: mm | NPS labels unchanged | Hole entries: count x diameter (mm) | Source page 5

NPS	O	T	R	X	Holes	Bolt circle	L2	H	B2	L	B	r	L3	B3	D	C	THr
1/2	95.25	14.22	35.05	38.10	4 x 15.75	66.55	52.32	21.34	By buyer	22.35	22.35	3.05	22.35	22.86	9.65	23.62	15.75
3/4	117.35	15.75	42.93	47.75	4 x 19.05	82.55	57.15	26.67	-	25.40	27.69	3.05	25.40	28.19	11.18	28.96	15.75
1	123.95	17.53	50.80	53.85	CHECK	88.90	61.98	33.53	-	26.92	34.54	3.05	26.92	35.05	12.70	35.81	17.53
1-1/4	133.35	20.57	63.50	63.50	4 x 19.05	98.55	66.55	42.16	-	28.45	43.18	4.83	28.45	43.69	14.22	44.45	20.57
1-1/2	155.45	22.35	73.15	69.85	4 x 22.35	114.30	69.85	48.26	-	31.75	49.53	6.35	31.75	50.04	15.75	50.55	22.35
2	165.10	25.40	91.95	84.07	8 x 19.05	127.00	73.15	60.45	-	36.58	61.98	7.87	36.58	62.48	17.53	63.50	28.45
2-1/2	190.50	28.45	104.65	100.08	8 x 22.35	149.35	79.25	73.15	-	41.15	74.68	7.87	41.15	75.44	19.05	76.20	31.75
3	209.55	31.75	127.00	117.35	8 x 22.35	168.15	82.55	88.90	-	45.97	90.68	9.65	45.97	91.44	20.57	92.20	35.05
3-1/2	228.60	35.05	139.70	133.35	8 x 25.40	184.15	85.85	101.60	-	49.28	103.38	9.65	49.28	104.14	-	104.90	39.62
4	254.00	35.05	157.23	146.05	8 x 25.40	200.15	88.90	114.30	-	50.80	116.08	11.18	50.80	116.84	-	117.60	36.58
5	279.40	38.10	185.67	177.80	8 x 25.40	234.95	101.60	141.22	-	53.85	143.76	11.18	53.85	144.53	-	144.53	42.93
6	317.50	41.15	215.90	206.25	12 x 25.40	269.75	103.12	168.40	-	57.15	170.69	12.70	57.15	171.45	-	171.45	45.97
8	381.00	47.75	269.75	260.35	12 x 28.45	330.20	117.35	219.20	-	68.33	221.49	12.70	68.33	222.25	-	222.25	50.80
10	444.50	53.85	323.85	320.55	16 x 31.75	387.35	123.95	273.05	-	73.15	276.35	12.70	101.60	277.37	-	276.35	55.63
12	520.70	57.15	381.00	374.65	16 x 35.05	450.85	136.65	323.85	-	79.25	327.15	12.70	107.95	328.17	-	328.68	60.45
14	584.20	60.45	412.75	425.45	20 x 35.05	514.35	149.35	355.60	-	84.07	359.16	12.70	117.35	360.17	-	360.43	63.50
16	647.70	63.50	469.90	482.60	20 x 38.10	571.50	152.40	406.40	-	93.73	410.46	12.70	127.00	411.23	-	411.23	68.33
18	711.20	66.55	533.40	533.40	24 x 38.10	628.65	165.10	457.20	-	98.55	461.77	12.70	136.65	462.28	-	462.03	69.85
20	774.70	69.85	584.20	587.25	24 x 41.15	685.80	168.15	508.00	-	101.60	513.08	12.70	146.05	514.35	-	512.83	73.15
22	838.20	73.15	641.35	641.35	24 x 44.45	742.95	171.45	558.80	-	107.95	564.39	12.70	152.40	565.15	-	--	--
24	914.40	76.20	692.15	701.55	24 x 47.75	812.80	174.75	609.60	-	114.30	615.95	12.70	158.75	615.95	-	614.43	82.55

1. Sizes NPS 1/2 through 3-1/2 are same as Class 600 flanges.
2. 6.35 mm raised face not included in dimensions T, L and L2.
3. Bolt hole diameter 3.175 mm larger than bolt diameter.

Converted from rounded source inch values; NOT a DIN/EN substitution or certified ASME metric table.
Diagram callouts: 1/16 in = 1.5875 mm; 1/8 in = 3.175 mm; 1/4 in = 6.35 mm. NPS is a nominal label.
CHECK = confirm ambiguous source cell. By buyer / dash = not specified. Confirm approved drawing before ordering.

ANSI B16.5 Class 600 Flanges - mm

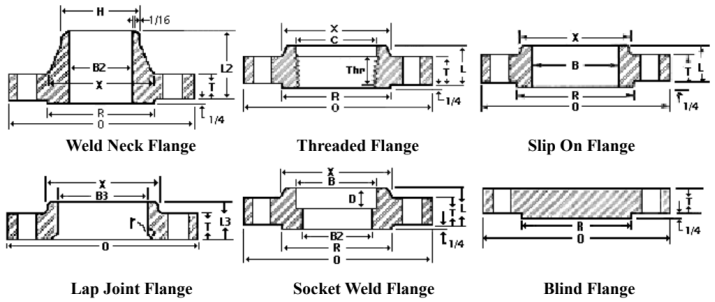

Dimensions: mm | NPS labels unchanged | Hole entries: count x diameter (mm) | Source page 6

NPS	O	T	R	X	Holes	Bolt circle	L2	H	B2	L	B	r	L3	B3	D	C	THr
1/2	95.25	14.22	35.05	38.10	4 x 15.75	66.55	52.32	21.34	By buyer	22.35	22.35	3.05	22.35	22.86	9.65	23.62	15.75
3/4	117.35	15.75	42.93	47.75	4 x 19.05	82.55	57.15	26.67	-	25.40	27.69	3.05	25.40	28.19	11.18	28.96	15.75
1	123.95	17.53	50.80	53.85	CHECK	88.90	61.98	33.53	-	26.92	34.54	3.05	26.92	35.05	12.70	35.81	17.53
1-1/4	133.35	20.57	63.50	63.50	4 x 19.05	98.55	66.55	42.16	-	28.45	43.18	4.83	28.45	43.69	14.22	44.45	20.57
1-1/2	155.45	22.35	73.15	69.85	4 x 22.35	114.30	69.85	48.26	-	31.75	49.53	6.35	31.75	50.04	15.75	50.55	22.35
2	165.10	25.40	91.95	84.07	8 x 19.05	127.00	73.15	60.45	-	36.58	61.98	7.87	36.58	62.48	17.53	63.50	28.45
2-1/2	190.50	28.45	104.65	100.08	8 x 22.35	149.35	79.25	73.15	-	41.15	74.68	7.87	41.15	75.44	19.05	76.20	31.75
3	209.55	31.75	127.00	117.35	8 x 22.35	168.15	82.55	88.90	-	45.97	90.68	9.65	45.97	91.44	20.57	92.20	35.05
3-1/2	228.60	35.05	139.70	133.35	8 x 25.40	184.15	85.85	101.60	-	49.28	103.38	9.65	49.28	104.14	-	104.90	39.62
4	273.05	38.10	157.23	152.40	8 x 25.40	215.90	101.60	114.30	-	53.85	116.08	11.18	53.85	116.84	-	117.60	41.15
5	330.20	44.45	185.67	188.98	8 x 28.45	266.70	114.30	141.22	-	60.45	143.76	11.18	60.45	144.53	-	144.53	47.75
6	355.60	47.75	215.90	222.25	12 x 28.45	292.10	117.35	168.40	-	66.55	170.69	12.70	66.55	171.45	-	171.45	50.80
8	419.10	55.63	269.75	273.05	12 x 31.75	349.25	133.35	219.20	-	76.20	221.49	12.70	76.20	222.25	-	222.25	57.15
10	508.00	63.50	323.85	342.90	16 x 35.05	431.80	152.40	273.05	-	85.85	276.35	12.70	111.25	277.37	-	276.35	65.02
12	558.80	66.55	381.00	400.05	20 x 35.05	488.95	155.45	323.85	-	91.95	327.15	12.70	117.35	328.17	-	328.68	69.85
14	603.25	69.85	412.75	431.80	20 x 38.10	527.05	165.10	355.60	-	93.73	359.16	12.70	127.00	360.17	-	360.43	73.15
16	685.80	76.20	469.90	495.30	20 x 41.15	603.25	177.80	406.40	-	106.43	410.46	12.70	139.70	411.23	-	462.03	77.72
18	742.95	82.55	533.40	546.10	20 x 44.45	654.05	184.15	457.20	-	117.35	461.77	12.70	152.40	462.28	-	459.74	79.25
20	812.80	88.90	584.20	609.60	24 x 44.45	723.90	190.50	508.00	-	127.00	513.08	12.70	165.10	514.35	-	512.83	82.55
22	869.95	95.25	641.35	666.75	24 x 44.45	778.00	196.85	558.80	-	133.35	564.39	12.70	174.75	565.15	-	--	--
24	939.80	101.60	692.15	717.55	24 x 50.80	838.20	203.20	609.60	-	139.70	615.95	12.70	184.15	615.95	-	614.43	91.95

1. Sizes NPS 1/2 through 3-1/2 are same as Class 400 flanges.
2. 6.35 mm raised face not included in dimensions T, L and L2.
3. Bolt hole diameter 3.175 mm larger than bolt diameter.

Converted from rounded source inch values; NOT a DIN/EN substitution or certified ASME metric table.
Diagram callouts: 1/16 in = 1.5875 mm; 1/8 in = 3.175 mm; 1/4 in = 6.35 mm. NPS is a nominal label.
CHECK = confirm ambiguous source cell. By buyer / dash = not specified. Confirm approved drawing before ordering.

ANSI B16.5 Class 900 Flanges - mm

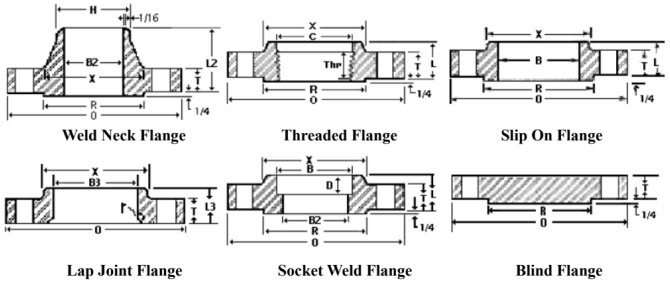

Dimensions: mm | NPS labels unchanged | Hole entries: count x diameter (mm) | Source page 7

NPS	O	T	R	X	Holes	Bolt circle	L2	H	B2	L	B	r	L3	B3	THr
3	241.30	38.10	127.00	127.00	8 x 25.40	190.50	101.60	88.90	By buyer	54.10	90.68	9.65	54.10	91.44	41.40
4	292.10	44.45	157.23	158.75	8 x 31.75	234.95	114.30	114.30	-	69.85	116.08	11.18	69.85	116.84	47.75
5	349.25	50.80	185.67	190.50	8 x 35.05	279.40	127.00	141.22	-	79.50	143.76	11.18	79.50	144.53	54.10
6	381.00	55.63	215.90	234.95	12 x 31.75	317.50	139.70	168.40	-	85.85	170.69	12.70	85.85	171.45	57.15
8	469.90	63.50	270.00	298.45	12 x 38.10	393.70	162.05	219.20	-	101.60	221.49	12.70	114.30	222.25	63.50
10	546.10	69.85	323.85	368.30	16 x 38.10	469.90	184.15	273.05	-	107.95	276.35	12.70	127.00	277.37	71.37
12	609.60	79.50	381.00	419.10	20 x 38.10	533.40	200.15	323.85	-	117.60	327.15	12.70	143.00	328.17	76.20
14	641.35	85.85	412.75	450.85	20 x 41.40	558.80	212.85	355.60	-	130.30	359.16	12.70	155.70	360.17	82.55
16	704.85	88.90	469.90	508.00	20 x 44.45	615.95	215.90	406.40	-	133.35	410.46	12.70	165.10	411.23	85.85
18	787.40	101.60	533.40	565.15	20 x 50.80	685.80	228.60	457.20	-	152.40	461.77	12.70	190.50	462.28	88.90
20	857.25	107.95	584.20	622.30	20 x 54.10	749.30	247.65	508.00	-	158.75	513.08	12.70	209.55	514.35	92.20
24	1041.40	139.70	692.15	749.30	20 x 66.80	901.70	292.10	609.60	-	203.20	615.95	12.70	266.70	615.95	101.60

1. Sizes NPS 1/2 through 2-1/2 are same as Class 1500 flanges.
2. 6.35 mm raised face not included in dimensions T, L and L2.
3. Bolt hole diameter 3.175 mm larger than bolt diameter.

Converted from rounded source inch values; NOT a DIN/EN substitution or certified ASME metric table.
Diagram callouts: 1/16 in = 1.5875 mm; 1/8 in = 3.175 mm; 1/4 in = 6.35 mm. NPS is a nominal label.
CHECK = confirm ambiguous source cell. By buyer / dash = not specified. Confirm approved drawing before ordering.

ANSI B16.5 Class 1500 Flanges - mm

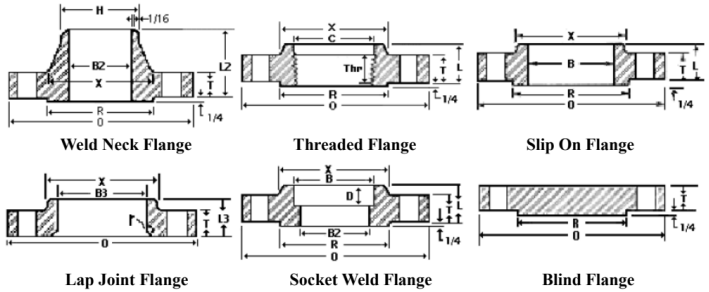

Dimensions: mm | NPS labels unchanged | Hole entries: count x diameter (mm) | Source page 8

NPS	O	T	R	X	Holes	Bolt circle	L2	H	B2	L	B	r	L3	D	B3	THr
1/2	120.65	22.35	35.05	38.10	4 x 22.35	82.55	60.45	21.34	By buyer	31.75	22.35	3.30	31.75	9.65	22.86	22.35
3/4	130.30	25.40	42.93	44.45	4 x 22.35	88.90	69.85	26.67	-	35.05	27.69	3.30	35.05	11.18	28.19	25.40
1	149.35	28.70	50.80	52.32	4 x 25.40	101.60	73.15	33.53	-	41.40	34.54	3.30	41.40	12.70	35.05	28.70
1-1/4	158.75	28.70	63.50	63.50	4 x 25.40	111.25	73.15	42.16	-	41.40	43.18	4.83	41.40	14.22	43.69	30.23
1-1/2	177.80	31.75	73.15	69.85	4 x 28.70	123.95	82.55	48.26	-	44.45	49.53	6.35	44.45	16.00	50.04	31.75
2	215.90	38.10	92.20	104.90	8 x 25.40	165.10	101.60	60.45	-	57.15	61.98	7.87	57.15	17.53	62.48	38.10
2-1/2	244.60	41.40	104.90	123.95	8 x 28.70	190.50	104.90	73.15	-	63.50	74.68	7.87	63.50	19.05	75.44	47.75
3	266.70	47.75	127.00	133.35	8 x 31.75	203.20	117.60	88.90	-	73.15	90.68	9.65	73.15	--	91.44	50.80
4	311.15	54.10	157.23	162.05	8 x 35.05	241.30	123.95	114.30	-	90.42	116.08	11.18	90.42	--	116.84	57.15
5	374.65	73.15	185.67	196.85	8 x 41.40	292.10	155.70	141.22	-	104.90	143.76	11.18	104.90	--	144.53	63.50
6	393.70	82.55	215.90	228.60	12 x 38.10	317.50	171.45	168.40	-	119.13	170.69	12.70	119.13	--	171.45	69.85
8	482.60	92.20	270.00	292.10	12 x 44.45	393.70	212.85	219.20	-	143.00	221.49	12.70	143.00	--	222.25	76.20
10	584.20	107.95	323.85	368.30	12 x 50.80	482.60	254.00	273.05	-	158.75	276.35	12.70	177.80	--	277.37	84.07
12	673.10	123.95	381.00	450.85	16 x 54.10	571.50	282.70	323.85	-	181.10	327.15	12.70	219.20	--	328.17	92.20
14	749.30	133.35	412.75	495.30	16 x 60.45	635.00	298.45	355.60	-	--	--	12.70	241.30	--	360.17	--
16	825.50	146.05	469.90	552.45	16 x 66.80	704.85	311.15	406.40	-	--	--	12.70	260.35	--	411.23	--
18	914.40	162.05	533.40	596.90	16 x 73.15	774.70	327.15	457.20	-	--	--	12.70	276.35	--	462.28	--
20	984.25	177.80	584.20	641.35	16 x 79.50	831.85	355.60	508.00	-	--	--	12.70	292.10	--	514.35	--
24	1168.40	203.20	692.15	762.00	16 x 92.20	990.60	406.40	609.60	-	--	--	12.70	330.20	--	615.95	--

1. 6.35 mm raised face not included in dimensions T, L and L2.
2. Bolt hole diameter 3.175 mm larger than bolt diameter.

Converted from rounded source inch values; NOT a DIN/EN substitution or certified ASME metric table.
Diagram callouts: 1/16 in = 1.5875 mm; 1/8 in = 3.175 mm; 1/4 in = 6.35 mm. NPS is a nominal label.
CHECK = confirm ambiguous source cell. By buyer / dash = not specified. Confirm approved drawing before ordering.

ANSI B16.5 Class 2500 Flanges - mm

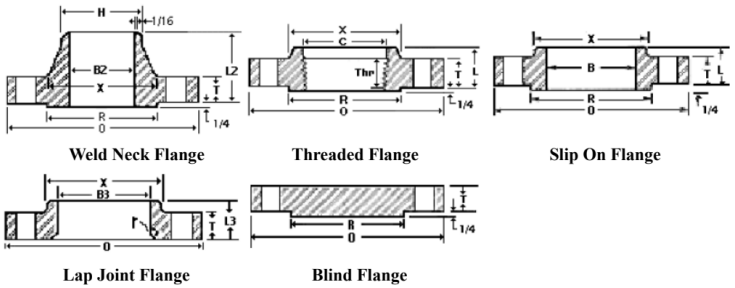

Dimensions: mm | NPS labels unchanged | Hole entries: count x diameter (mm) | Source page 9

NPS	O	T	R	X	Holes	Bolt circle	L2	H	B2	L	B	r	L3	B3	THr
1/2	133.35	30.23	35.05	42.93	4 x 22.35	88.90	73.15	21.34	By buyer	39.62	22.35	3.30	39.62	22.86	28.70
3/4	139.70	31.75	42.93	50.80	4 x 22.35	95.25	79.50	26.67	-	42.93	27.69	3.30	42.93	28.19	31.75
1	158.75	35.05	50.80	57.15	4 x 25.40	107.95	88.90	33.53	-	47.75	34.54	3.30	47.75	35.05	35.05
1-1/4	184.15	38.10	63.50	73.15	4 x 28.70	130.30	95.25	42.16	-	52.32	43.18	4.57	52.32	43.69	38.10
1-1/2	203.20	44.45	73.15	79.50	4 x 31.75	146.05	111.25	48.26	-	60.45	49.53	6.35	60.45	50.04	44.45
2	234.95	50.80	92.20	95.25	8 x 28.70	171.45	127.00	60.45	-	69.85	61.98	7.87	69.85	62.48	50.80
2-1/2	266.70	57.15	104.90	114.30	8 x 31.75	196.85	143.00	73.15	-	79.50	74.68	7.87	79.50	75.44	57.15
3	304.80	66.80	127.00	133.35	8 x 35.05	228.60	168.40	88.90	-	92.20	90.68	9.40	92.20	91.44	63.50
4	355.60	76.20	157.23	165.10	8 x 41.40	273.05	190.50	114.30	-	107.95	116.08	11.18	107.95	116.84	69.85
5	419.10	92.20	185.67	203.20	8 x 47.75	323.85	228.60	141.22	-	130.30	143.76	11.18	130.30	144.53	76.20
6	482.60	107.95	215.90	234.95	8 x 54.10	368.30	273.05	168.40	-	152.40	170.69	12.70	152.40	171.45	82.55
8	552.45	127.00	270.00	304.80	12 x 54.10	438.15	317.50	219.20	-	177.80	221.49	12.70	177.80	222.25	95.25
10	673.10	165.10	323.85	374.65	12 x 66.80	539.75	419.10	273.05	-	228.60	276.35	12.70	228.60	277.37	107.95
12	762.00	184.15	381.00	441.45	12 x 73.15	619.25	463.55	323.85	-	254.00	327.15	12.70	254.00	328.17	120.65

1. 6.35 mm raised face not included in dimensions T, L and L2.
2. Bolt hole diameter 3.175 mm larger than bolt diameter.

Converted from rounded source inch values; NOT a DIN/EN substitution or certified ASME metric table.
Diagram callouts: 1/16 in = 1.5875 mm; 1/8 in = 3.175 mm; 1/4 in = 6.35 mm. NPS is a nominal label.
CHECK = confirm ambiguous source cell. By buyer / dash = not specified. Confirm approved drawing before ordering.

Dimensional Tolerance - ANSI B16.5

Threaded, Socket-Welding, Slip-On, Lap Joint and Blind			
Outside Diameter *	6” and below	±1.5mm	
	8” ~ 24”	±2.0mm	
	over 24”	±3.0mm	
Inside Diameter	Threaded	Within limits on boring gauge	
	Socket-Welding, Slip-On and Lap-Joint	2-1/2” and below	+0.5mm -0mm
		3” ~ 10”	+0.8mm -0mm
		12” and above	+1.6mm -0mm
Outside Diameter of Hub *	1/2” ~ 24”	+3.0mm -1.0mm	
Diameter of Contact Face	1/16” Raised Face	±0.8mm	
	1/4” Raised Face Tongue & Groove Male, Female	±0.5mm	
Diameter of Counter Bore	Same as for Inside Diameter		
Drilling	Bore	6” and below	±1.0mm
		8” ~ 24”	±1.6mm
	Eccentricity of Bore	±0.8mm	
	Diameter of Bolt Hole	±0.5mm	
	Bolt hole spacing 24” and above	±0.8mm	
Thickness	1/2” ~ 4”	+1.6mm -0mm	
	5” ~ 12”	+2.0mm -0mm	
	14” ~ 18”	+3.0mm -0mm	
	20” and above	+4.0mm -0mm	
Length Through the Hub *	1/2” ~ 10”	±1.6mm	
	12” and above	±3.0mm	

* Tolerances not listed in B16.5

Weld Neck			
Outside Diameter *	6” and below	±1.5mm	
	8” ~ 24”	±2.0mm	
	over 24”	±3.0mm	
Inside Diameter	1/2” ~ 10”	+0.8mm -0mm	
	12” ~ 18”	±1.6mm	
	20” and above	+3.2mm -1.6mm	
Diameter of Hub at Base *	1/2” ~ 24”	+3.0mm -1.0mm	
Diameter of Contact Face	1/16” Raised Face	±0.8mm	
	1/4” Raised Face Tongue & Groove Male, Female	±0.5mm	
Diameter of Hub at Point of Welding	1/2” ~ 5”	+2.4mm -0.8mm	
	6” and above	+4.0mm -0.8mm	
Drilling	Bore	6” and below	±1.0mm
		8” ~ 24”	±1.6mm
	Eccentricity of Bore	±0.8mm	
	Diameter of Bolt Hole	±0.5mm	
	Bolt hole spacing 24” and above	±0.8mm	
Thickness	1/2” ~ 4”	+1.6mm -0mm	
	5” ~ 12”	+2.0mm -0mm	
	14” ~ 18”	+3.0mm -0mm	
	20” and above	+4.0mm -0mm	
Length Through the Hub	1/2” ~ 10”	±1.6mm	
	12” and above	±3.0mm	

Welding Bevel Standards

For Wall Thickness “t” 3/16” to 3/4” including

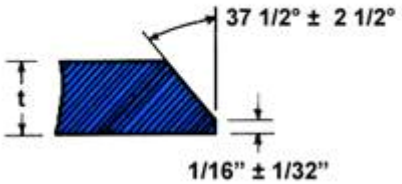

For Wall Thickness “t” greater than 3/4”

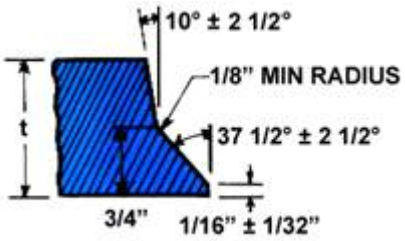

ANSI B16.47 Series A Class 150 Flanges - mm

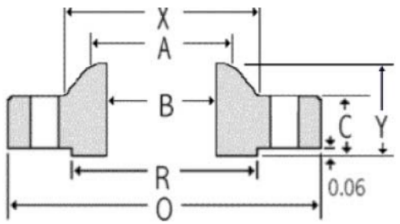

Weld Neck

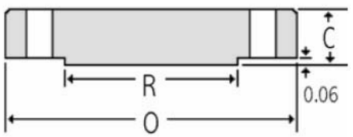

Blind

Dimensions: mm | NPS labels unchanged | Hole entries: count x diameter (mm) | Source page 11

NPS	OD O	WN thick C	BL thick C	RF OD R	Base dia X	Bore B	LTH Y	Bevel dia A	Bolt circle	Hole dia	Hole count	WN weight*	BL weight*
26	869.95	68.33	68.33	749.30	676.15	By buyer	120.65	660.40	806.45	35.05	24	300	702
28	927.10	71.37	71.37	800.10	726.95	-	125.48	711.20	863.60	35.05	28	345	833
30	984.25	74.68	74.68	857.25	781.05	-	136.65	762.00	914.40	35.05	28	400	982
32	1060.45	81.03	81.03	914.40	831.85	-	144.53	812.80	977.90	41.15	28	505	1237
34	1111.25	82.55	82.55	965.20	882.65	-	149.35	863.60	1028.70	41.15	32	540	1384
36	1168.40	90.42	90.42	1022.35	933.45	-	157.23	914.40	1085.85	41.15	32	640	1676
38	1238.25	87.38	87.38	1073.15	990.60	-	157.23	965.20	1149.35	41.15	32	720	1819
40	1289.05	90.42	90.42	1123.95	1041.40	-	163.58	1016.00	1200.15	41.15	36	775	2040
42	1346.20	96.77	96.77	1193.80	1092.20	-	171.45	1066.80	1257.30	41.15	36	890	2381
44	1403.35	101.60	101.60	1244.60	1143.00	-	177.80	1117.60	1314.45	41.15	40	990	2717
46	1454.15	103.12	103.12	1295.40	1196.85	-	185.67	1168.40	1365.25	41.15	40	1060	2961
48	1511.30	107.95	107.95	1358.90	1247.65	-	192.02	1219.20	1422.40	41.15	44	1185	3348
50	1568.45	111.25	111.25	1409.70	1301.75	-	203.20	1270.00	1479.55	47.75	44	1270	3716
52	1625.60	115.82	115.82	1460.50	1352.55	-	209.55	1320.80	1536.70	47.75	44	1410	4156
54	1682.75	120.65	120.65	1511.30	1403.35	-	215.90	1371.60	1593.85	47.75	44	1585	4639
56	1746.25	123.95	123.95	1574.80	1457.45	-	228.60	1422.40	1651.00	47.75	48	1760	5132
58	1803.40	128.52	128.52	1625.60	1508.25	-	234.95	1473.20	1708.15	47.75	48	1915	5675
60	1854.20	131.83	131.83	1676.40	1559.05	-	239.78	1524.00	1758.95	47.75	52	2045	6154

Weight in pounds.

Converted from rounded source inch values; NOT a DIN/EN substitution or certified ASME metric table.
Diagram callouts: 1/16 in = 1.5875 mm; 1/8 in = 3.175 mm; 1/4 in = 6.35 mm. NPS is a nominal label.
CHECK = confirm ambiguous source cell. By buyer / dash = not specified. Confirm approved drawing before ordering.
* Weights retain source pound (lb) values, not kg.

ANSI B16.47 Series A Class 300 Flanges - mm

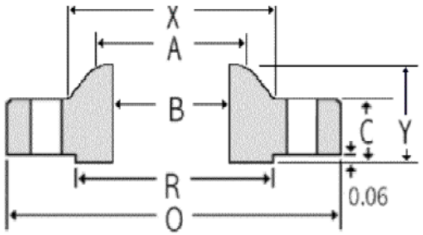

Weld Neck Flange

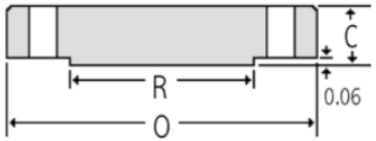

Blind Flange

Dimensions: mm | NPS labels unchanged | Hole entries: count x diameter (mm) | Source page 12

NPS	OD O	WN thick C	BL thick C	RF OD R	Base dia X	Bore B	LTH Y	Bevel dia A	Bolt circle	Hole dia	Hole count	WN weight*	BL weight*
26	971.55	79.25	84.07	749.30	720.85	By buyer	184.15	660.40	876.30	44.45	28	605	1078
28	1035.05	85.85	90.42	800.10	774.70	-	196.85	711.20	939.80	44.45	28	745	1315
30	1092.20	91.95	95.25	857.25	827.02	-	209.55	762.00	996.95	47.75	28	870	1543
32	1149.35	98.55	100.08	914.40	881.13	-	222.25	812.80	1054.10	50.80	28	1005	1795
34	1206.50	101.60	104.65	965.20	936.75	-	231.65	863.60	1104.90	50.80	28	1145	2068
36	1270.00	104.65	111.25	1022.35	990.60	-	241.30	914.40	1168.40	53.85	32	1275	2436
38	1168.40	107.95	107.95	1028.70	993.65	-	180.85	965.20	1092.20	41.15	32	695	2001
40	1238.25	114.30	114.30	1085.85	1047.75	-	193.55	1016.00	1155.70	44.45	32	840	2380
42	1289.05	119.13	119.13	1136.65	1098.55	-	200.15	1066.80	1206.50	44.45	32	950	2688
44	1352.55	123.95	123.95	1193.80	1149.35	-	206.25	1117.60	1263.65	47.75	32	1055	3079
46	1416.05	128.52	128.52	1244.60	1203.45	-	215.90	1168.40	1320.80	50.80	28	1235	3499
48	1466.85	133.35	133.35	1301.75	1254.25	-	223.77	1219.20	1371.60	50.80	32	1380	3896
50	1530.35	139.70	139.70	1358.90	1305.05	-	231.65	1270.00	1428.75	53.85	32	1530	4442
52	1581.15	144.53	144.53	1409.70	1355.85	-	238.25	1320.80	1479.55	53.85	32	1660	4906
54	1657.35	152.40	152.40	1466.85	1409.70	-	252.48	1371.60	1549.40	60.45	28	2050	5684
56	1708.15	153.92	153.92	1517.65	1463.55	-	260.35	1422.40	1600.20	60.45	28	2155	6098
58	1758.95	158.75	158.75	1574.80	1514.35	-	266.70	1473.20	1651.00	60.45	32	2270	6669
60	1809.75	163.58	163.58	1625.60	1565.15	-	273.05	1524.00	1701.80	60.45	32	2470	7274

Weights in pounds.
Note: Nonlisted and intermediate sizes require separate dimensional confirmation.

Converted from rounded source inch values; NOT a DIN/EN substitution or certified ASME metric table.
Diagram callouts: 1/16 in = 1.5875 mm; 1/8 in = 3.175 mm; 1/4 in = 6.35 mm. NPS is a nominal label.
CHECK = confirm ambiguous source cell. By buyer / dash = not specified. Confirm approved drawing before ordering.
* Weights retain source pound (lb) values, not kg.

ANSI B16.47 Series A Class 400 Flanges - mm

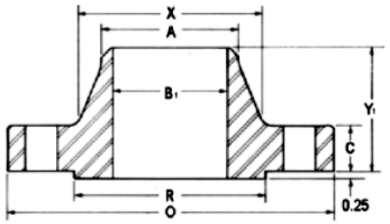

Weld Neck Flange

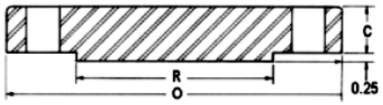

Blind Flange

Dimensions: mm | NPS labels unchanged | Hole entries: count x diameter (mm) | Source page 13

NPS	OD O	WN thick C	BL thick C	LTH Y	Base dia X	Bevel dia A	RF OD R	Bolt circle	Hole count	Hole dia	WN weight*	BL weight*
26	971.55	88.90	98.55	193.55	726.95	660.40	749.30	876.30	28	47.75	650	1263
28	1035.05	95.25	104.65	206.25	782.57	711.20	800.10	939.80	28	50.80	785	1522
30	1092.20	101.60	111.25	218.95	836.68	762.00	857.25	996.95	28	53.85	905	1802
32	1149.35	107.95	115.82	231.65	889.00	812.80	914.40	1054.10	28	53.85	1065	2077
34	1206.50	111.25	122.17	241.30	944.63	863.60	965.20	1104.90	28	53.85	1200	2415
36	1270.00	114.30	128.52	250.95	1000.25	914.40	1022.35	1168.40	32	53.85	1340	2815
38	1206.50	123.95	123.95	206.25	1003.30	965.20	1035.05	1117.60	32	47.75	935	2450
40	1270.00	130.05	130.05	215.90	1054.10	1016.00	1092.20	1174.75	32	50.80	1090	2848
42	1320.80	133.35	133.35	223.77	1107.95	1066.80	1143.00	1225.55	32	50.80	1190	3159
44	1384.30	139.70	139.70	233.17	1158.75	1117.60	1200.15	1282.70	32	53.85	1375	3635
46	1441.45	146.05	146.05	244.35	1212.85	1168.40	1257.30	1339.85	36	53.85	1525	4120
48	1511.30	152.40	152.40	257.05	1266.95	1219.20	1308.10	1403.35	28	60.45	1790	4726
50	1568.45	157.23	158.75	268.22	1320.80	1270.00	1361.95	1460.50	32	60.45	1950	5303
52	1619.25	162.05	163.58	276.35	1371.60	1320.80	1412.75	1511.30	32	60.45	2125	5823
54	1701.80	169.93	171.45	289.05	1425.45	1371.60	1470.15	1581.15	28	66.55	2565	6742
56	1752.60	174.75	176.28	298.45	1479.55	1422.40	1527.05	1631.95	32	66.55	2710	7352
58	1803.40	177.80	180.85	306.32	1530.35	1473.20	1577.85	1682.75	32	66.55	3230	7986
60	1885.95	185.67	188.98	319.02	1584.45	1524.00	1635.25	1752.60	32	73.15	3820	9126

Weights in pounds.
N ote: Nonlisted and intermediate sizes require separate dimensional confirmation.

Converted from rounded source inch values; NOT a DIN/EN substitution or certified ASME metric table.
Diagram callouts: 1/16 in = 1.5875 mm; 1/8 in = 3.175 mm; 1/4 in = 6.35 mm. NPS is a nominal label.
CHECK = confirm ambiguous source cell. By buyer / dash = not specified. Confirm approved drawing before ordering.
* Weights retain source pound (lb) values, not kg.

ANSI B16.47 Series A Class 600 Flanges - mm

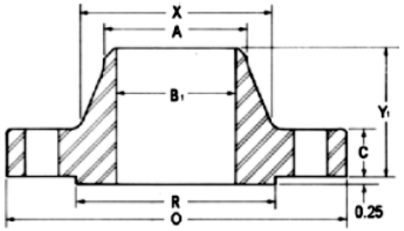

Weld Neck Flange

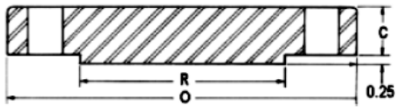

Blind Flange

Dimensions: mm | NPS labels unchanged | Hole entries: count x diameter (mm) | Source page 14

NPS	OD O	WN thick C	BL thick C	LTH Y	Base dia X	Bevel dia A	RF OD R	Bolt circle	Hole count	Hole dia	WN weight*	BL weight*
26	1016.00	107.95	125.48	222.25	747.78	660.40	749.30	914.40	28	50.80	940	1759
28	1073.15	111.25	131.83	234.95	803.15	711.20	800.10	965.20	28	53.85	1060	2061
30	1130.30	114.30	139.70	247.65	862.08	762.00	857.25	1022.35	28	53.85	1210	2423
32	1193.80	117.35	147.57	260.35	917.45	812.80	914.40	1079.50	28	60.45	1375	2856
34	1244.60	120.65	153.92	269.75	973.07	863.60	965.20	1130.30	28	60.45	1540	3237
36	1314.45	123.95	162.05	282.45	1031.75	914.40	1022.35	1193.80	28	66.55	1705	3802
38	1270.00	152.40	155.45	254.00	1022.35	965.20	1054.10	1162.05	28	60.45	1470	3404
40	1320.80	158.75	162.05	263.65	1073.15	1016.00	1111.25	1212.85	32	60.45	1630	3838
42	1403.35	168.15	171.45	279.40	1127.25	1066.80	1168.40	1282.70	28	66.55	2030	4585
44	1454.15	172.97	177.80	289.05	1181.10	1117.60	1225.55	1333.50	32	66.55	2160	5105
46	1511.30	179.32	185.67	299.97	1234.95	1168.40	1276.35	1390.65	32	66.55	2410	5758
48	1593.85	188.98	195.33	315.98	1289.05	1219.20	1333.50	1460.50	32	73.15	2855	6737
50	1670.05	196.85	203.20	328.68	1343.15	1270.00	1384.30	1524.00	28	79.25	3330	7695
52	1720.85	203.20	209.55	336.55	1393.95	1320.80	1435.10	1574.80	32	79.25	3560	8426
54	1778.00	209.55	217.42	349.25	1447.80	1371.60	1492.25	1631.95	32	79.25	3920	9333
56	1854.20	217.42	225.55	361.95	1501.65	1422.40	1543.05	1695.45	32	85.85	4280	10529
58	1905.00	222.25	231.65	369.82	1552.45	1473.20	1600.20	1746.25	32	85.85	4640	11414
60	1993.90	233.43	242.82	388.87	1609.85	1524.00	1657.35	1822.45	28	91.95	5000	13108

Weights in pounds.
Note: Nonlisted and intermediate sizes require separate dimensional confirmation.

Converted from rounded source inch values; NOT a DIN/EN substitution or certified ASME metric table.
Diagram callouts: 1/16 in = 1.5875 mm; 1/8 in = 3.175 mm; 1/4 in = 6.35 mm. NPS is a nominal label.
CHECK = confirm ambiguous source cell. By buyer / dash = not specified. Confirm approved drawing before ordering.
* Weights retain source pound (lb) values, not kg.

ANSI B16.47 Series A Class 900 Flanges - mm

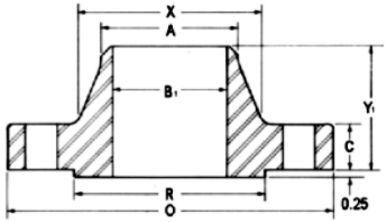

Weld Neck Flange

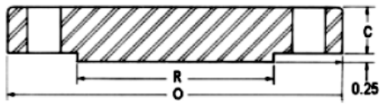

Blind Flange

Dimensions: mm | NPS labels unchanged | Hole entries: count x diameter (mm) | Source page 15

NPS	OD O	WN thick C	BL thick C	LTH Y	Base dia X	Bevel dia A	RF OD R	Bolt circle	Hole count	Hole dia	WN weight*	BL weight*
26	1085.85	139.70	160.27	285.75	774.70	660.40	749.30	952.50	20	73.15	1,525	2,566
28	1168.40	142.75	171.45	298.45	831.85	711.20	800.10	1022.35	20	79.25	1,810	3,178
30	1231.90	149.35	182.37	311.15	889.00	762.00	857.25	1085.85	20	79.25	2,120	3,758
32	1314.45	158.75	193.55	330.20	946.15	812.80	914.40	1155.70	20	85.85	2,545	4,541
34	1397.00	165.10	204.72	349.25	1006.35	863.60	965.20	1225.55	20	91.95	2,970	5,425
36	1460.50	171.45	214.38	361.95	1063.75	914.40	1022.35	1289.05	20	91.95	3,395	6,209
38	1460.50	190.50	215.90	352.55	1073.15	965.20	1098.55	1289.05	20	91.95	3,385	6,253
40	1511.30	196.85	223.77	363.47	1127.25	1016.00	1162.05	1339.85	24	91.95	3,620	6,940
42	1562.10	206.25	231.65	371.35	1176.27	1066.80	1212.85	1390.65	24	91.95	3,960	7,675
44	1647.95	214.38	242.82	390.65	1234.95	1117.60	1270.00	1463.55	24	98.55	4,300	8,954
46	1733.55	225.55	255.52	410.97	1292.35	1168.40	1333.50	1536.70	24	104.65	4,640	10,426
48	1784.35	233.43	263.65	419.10	1343.15	1219.20	1384.30	1587.50	24	104.65	4,980	11,398

Weights in pounds.
Note: Nonlisted and intermediate sizes require separate dimensional confirmation.

Converted from rounded source inch values; NOT a DIN/EN substitution or certified ASME metric table.
Diagram callouts: 1/16 in = 1.5875 mm; 1/8 in = 3.175 mm; 1/4 in = 6.35 mm. NPS is a nominal label.
CHECK = confirm ambiguous source cell. By buyer / dash = not specified. Confirm approved drawing before ordering.
* Weights retain source pound (lb) values, not kg.

ANSI B16.47 Series B Class 75 Flanges - mm

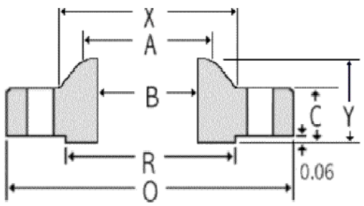

Weld Neck

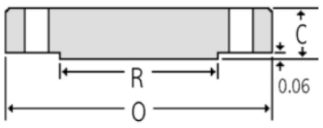

Blind

Dimensions: mm | NPS labels unchanged | Hole entries: count x diameter (mm) | Source page 16

NPS	OD O	WN thick C	BL thick C	RF OD R	Base dia X	Bore B	LTH Y	Bevel dia A	Bolt circle	Hole dia	Hole count	WN weight*	BL weight*
26	762.00	33.27	33.27	704.85	676.15	By buyer	58.67	661.92	723.90	19.05	36	80	255
28	812.80	33.27	33.27	755.65	726.95	-	61.98	712.72	774.70	19.05	40	85	290
30	863.60	33.27	33.27	806.45	777.75	-	65.02	763.52	825.50	19.05	44	90	330
32	914.40	35.05	36.58	857.25	828.55	-	69.85	814.32	876.30	19.05	48	105	390
34	965.20	35.05	38.10	908.05	879.35	-	73.15	865.12	927.10	19.05	52	110	430
36	1033.53	36.58	42.42	965.20	934.97	-	85.85	915.92	992.12	22.35	40	145	518
38	1084.33	38.10	44.45	1016.00	985.77	-	88.90	966.72	1042.92	22.35	40	160	595
40	1135.13	38.10	44.45	1066.80	1036.57	-	91.95	1017.52	1093.72	22.35	44	170	760
42	1185.93	39.62	47.75	1117.60	1087.37	-	95.25	1068.32	1144.52	22.35	48	185	895
44	1250.95	42.93	49.28	1174.75	1139.95	-	104.65	1119.12	1203.45	25.40	36	230	1,065
46	1301.75	44.45	50.80	1225.55	1190.75	-	107.95	1169.92	1254.25	25.40	40	245	1,185
48	1352.55	45.97	53.85	1276.35	1241.55	-	111.25	1220.72	1305.05	25.40	44	270	1,315
50	1403.35	47.75	55.37	1327.15	1293.88	-	115.82	1271.52	1355.85	25.40	44	290	1,505
52	1457.45	47.75	57.15	1377.95	1344.68	-	120.65	1322.32	1409.70	25.40	48	310	1,665
54	1508.25	49.28	60.45	1428.75	1397.00	-	125.48	1373.12	1460.50	25.40	48	340	1,840
56	1574.80	50.80	61.98	1485.90	1450.85	-	134.87	1423.92	1520.95	28.45	40	400	2,110
58	1625.60	52.32	63.50	1536.70	1501.65	-	138.18	1474.72	1571.75	28.45	44	430	2,300
60	1676.40	55.63	66.55	1587.50	1552.45	-	144.53	1525.52	1622.55	28.45	44	475	2,500

Note: Nonlisted and intermediate sizes require separate dimensional confirmation.

Converted from rounded source inch values; NOT a DIN/EN substitution or certified ASME metric table.
Diagram callouts: 1/16 in = 1.5875 mm; 1/8 in = 3.175 mm; 1/4 in = 6.35 mm. NPS is a nominal label.
CHECK = confirm ambiguous source cell. By buyer / dash = not specified. Confirm approved drawing before ordering.
* Weights retain source values; weight unit is not stated on this source page: confirm separately.

ANSI B16.47 Series B Class 150 Flanges - mm

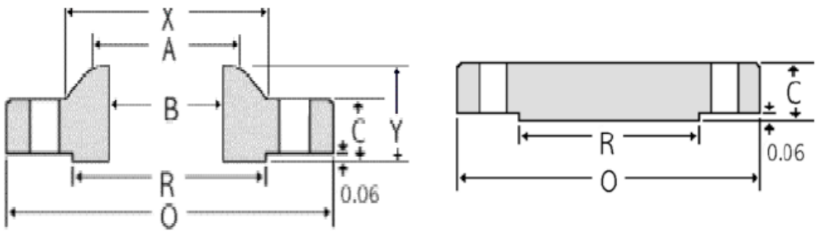

Weld Neck Blind

Dimensions in inches.
Note: Larger sizes as well as intermediate sizes can be furnished.

Dimensions: mm | NPS labels unchanged | Hole entries: count x diameter (mm) | Source page 17

NPS	OD O	WN thick C	BL thick C	RF OD R	Base dia X	Bore B	LTH Y	Bevel dia A	Bolt circle	Hole dia	Hole count	WN weight*	BL weight*
26	785.88	41.15	44.45	711.20	684.28	By buyer	88.90	661.92	744.47	22.35	36	120	373
28	836.68	44.45	47.75	762.00	735.08	-	95.25	712.72	795.27	22.35	40	140	454
30	887.48	44.45	50.80	812.80	787.40	-	100.08	763.52	846.07	22.35	44	150	543
32	941.32	45.97	53.85	863.60	839.72	-	107.95	814.32	900.18	22.35	48	170	648
34	1004.82	49.28	57.15	920.75	892.05	-	110.24	865.12	957.33	25.40	40	210	783
36	1057.15	52.32	58.67	971.55	944.63	-	117.35	915.92	1009.65	25.40	44	240	890
38	1123.95	53.85	63.50	1022.35	996.95	-	123.95	968.25	1069.85	28.45	40	290	1,089
40	1174.75	55.63	66.55	1079.50	1049.27	-	128.52	1019.05	1120.65	28.45	44	310	1,247
42	1225.55	58.67	68.33	1130.30	1101.85	-	133.35	1069.85	1171.45	28.45	48	345	1,393
44	1276.35	60.45	71.37	1181.10	1152.65	-	136.65	1120.65	1222.25	28.45	52	370	1,579
46	1341.37	61.98	74.68	1234.95	1204.98	-	144.53	1171.45	1284.22	31.75	40	435	1,824
48	1392.17	65.02	77.72	1289.05	1257.30	-	149.35	1222.25	1335.02	31.75	44	480	2,045
50	1442.97	68.33	80.77	1339.85	1308.10	-	153.92	1273.05	1385.82	31.75	48	520	2,284
52	1493.77	69.85	84.07	1390.65	1360.42	-	157.23	1323.85	1436.62	31.75	52	550	2,547
54	1549.40	71.37	87.38	1441.45	1412.75	-	162.05	1374.65	1492.25	31.75	56	620	2,848
56	1600.20	73.15	90.42	1492.25	1465.33	-	166.62	1425.45	1543.05	31.75	60	650	3,144
58	1674.88	74.68	93.47	1543.05	1516.13	-	174.75	1476.25	1611.38	35.05	48	780	3,560
60	1725.68	76.20	96.77	1600.20	1569.97	-	179.32	1527.05	1662.18	35.05	52	850	3,913

Converted from rounded source inch values; NOT a DIN/EN substitution or certified ASME metric table.
Diagram callouts: 1/16 in = 1.5875 mm; 1/8 in = 3.175 mm; 1/4 in = 6.35 mm. NPS is a nominal label.
CHECK = confirm ambiguous source cell. By buyer / dash = not specified. Confirm approved drawing before ordering.
* Weights retain source values; weight unit is not stated on this source page: confirm separately.

ANSI B16.47 Series B Class 300 Flanges - mm

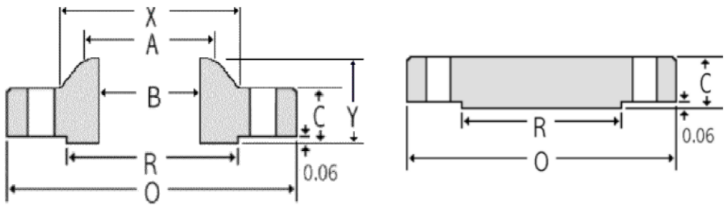

Weld Neck Blind

Dimensions: mm | NPS labels unchanged | Hole entries: count x diameter (mm) | Source page 18

NPS	OD O	WN thick C	BL thick C	RF OD R	Base dia X	Bore B	LTH Y	Bevel dia A	Bolt circle	Hole dia	Hole count	WN weight*	BL weight*
26	866.65	88.90	88.90	736.60	701.55	By buyer	144.53	665.23	803.15	35.05	32	400	907
28	920.75	88.90	88.90	787.40	755.65	-	149.35	716.03	857.25	35.05	36	450	1,023
30	990.60	93.73	93.73	844.55	812.80	-	157.99	768.35	920.75	38.10	36	550	1,249
32	1054.10	103.12	103.12	901.70	863.60	-	168.15	819.15	977.90	41.15	32	685	1,556
34	1107.95	103.12	103.12	952.50	917.45	-	172.97	869.95	1031.75	41.15	36	750	1,719
36	1171.45	103.12	103.12	1009.65	965.20	-	180.85	920.75	1089.15	44.45	32	840	1,921
38	1222.25	111.25	111.25	1060.45	1016.00	-	192.02	971.55	1139.95	44.45	36	915	2,257
40	1273.05	115.82	115.82	1114.55	1066.80	-	198.37	1022.35	1190.75	44.45	40	990	2,549
42	1333.50	119.13	119.13	1168.40	1117.60	-	204.72	1074.67	1244.60	47.75	36	1,135	2,876
44	1384.30	127.00	127.00	1219.20	1173.23	-	214.38	1125.47	1295.40	47.75	40	1,235	3,304
46	1460.50	128.52	130.05	1270.00	1228.85	-	222.25	1176.27	1365.25	50.80	36	1,470	3,766
48	1511.30	128.52	134.87	1327.15	1277.87	-	223.77	1227.07	1416.05	50.80	40	1,575	4,183
50	1562.10	138.18	139.70	1377.95	1330.45	-	234.95	1277.87	1466.85	50.80	44	1,710	4,629
52	1612.90	142.75	144.27	1428.75	1382.78	-	242.82	1328.67	1517.65	50.80	48	1,840	5,096
54	1673.35	136.65	149.35	1479.55	1435.10	-	239.78	1379.47	1577.85	50.80	48	1,980	5,678
56	1765.30	153.92	156.97	1536.70	1493.77	-	268.22	1430.27	1651.00	60.45	36	2,595	6,642
58	1827.28	153.92	162.05	1593.85	1547.88	-	274.57	1481.07	1712.98	60.45	40	2,770	7,347
60	1878.08	150.88	166.62	1651.00	1598.68	-	271.53	1531.87	1763.78	60.45	40	2,870	7,980

Note: Nonlisted and intermediate sizes require separate dimensional confirmation.

Converted from rounded source inch values; NOT a DIN/EN substitution or certified ASME metric table.
Diagram callouts: 1/16 in = 1.5875 mm; 1/8 in = 3.175 mm; 1/4 in = 6.35 mm. NPS is a nominal label.
CHECK = confirm ambiguous source cell. By buyer / dash = not specified. Confirm approved drawing before ordering.
* Weights retain source values; weight unit is not stated on this source page: confirm separately.

ANSI B16.47 Series B Class 400 Flanges - mm

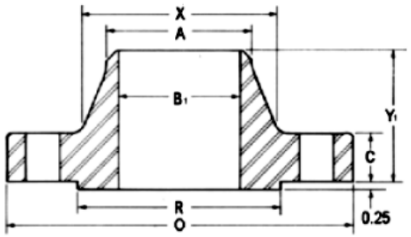

Weld Neck

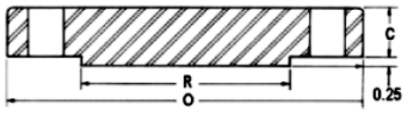

Blind

Dimensions: mm | NPS labels unchanged | Hole entries: count x diameter (mm) | Source page 19

NPS	OD O	WN thick C	BL thick C	LTH Y	Base dia X	Bevel dia A	RF OD R	Bolt circle	Hole count	Hole dia	WN weight*	BL weight*
26	850.90	88.90	88.90	149.35	688.85	660.40	711.20	781.05	28	38.10	360	874
28	914.40	95.25	95.25	158.75	739.65	711.20	762.00	838.20	24	41.15	450	1,081
30	971.55	101.60	101.60	169.93	793.75	762.00	819.15	895.35	28	41.15	530	1,302
32	1035.05	107.95	107.95	179.32	844.55	812.80	873.25	952.50	28	44.45	635	1,570
34	1085.85	111.25	111.25	187.45	898.65	863.60	927.10	1003.30	32	44.45	690	1,781
36	1155.70	119.13	119.13	200.15	952.50	914.40	980.95	1066.80	28	47.75	855	2,160
38	1206.50	123.95	123.95	206.25	1003.30	965.20	1035.05	1117.60	32	47.75	935	2,450
40	1270.00	130.05	130.05	215.90	1054.10	1016.00	1092.20	1174.75	32	50.80	1,090	2,848
42	1320.80	133.35	133.35	223.77	1107.95	1066.80	1143.00	1225.55	32	50.80	1,190	3,159
44	1384.30	139.70	139.70	233.17	1158.75	1117.60	1200.15	1282.70	32	53.85	1,375	3,635
46	1441.45	146.05	146.05	244.35	1212.85	1168.40	1257.30	1339.85	36	53.85	1,525	4,120
48	1511.30	152.40	152.40	257.05	1266.95	1219.20	1308.10	1403.35	28	60.45	1,790	4,726
50	1568.45	157.23	158.75	268.22	1320.80	1270.00	1361.95	1460.50	32	60.45	1,950	5,303
52	1619.25	162.05	163.58	276.35	1371.60	1320.80	1412.75	1511.30	32	60.45	2,125	5,823
54	1701.80	169.93	171.45	289.05	1425.45	1371.60	1470.15	1581.15	28	66.55	2,565	6,742
56	1752.60	174.75	176.28	298.45	1479.55	1422.40	1527.05	1631.95	32	66.55	2,710	7,352
58	1803.40	177.80	180.85	306.32	1530.35	1473.20	1577.85	1682.75	32	66.55	3,230	7,986
60	1885.95	185.67	188.98	319.02	1584.45	1524.00	1635.25	1752.60	32	73.15	3,820	9,126

Note: Nonlisted and intermediate sizes require separate dimensional confirmation.

Converted from rounded source inch values; NOT a DIN/EN substitution or certified ASME metric table.
Diagram callouts: 1/16 in = 1.5875 mm; 1/8 in = 3.175 mm; 1/4 in = 6.35 mm. NPS is a nominal label.
CHECK = confirm ambiguous source cell. By buyer / dash = not specified. Confirm approved drawing before ordering.
* Weights retain source values; weight unit is not stated on this source page: confirm separately.

ANSI B16.47 Series B Class 600 Flanges - mm

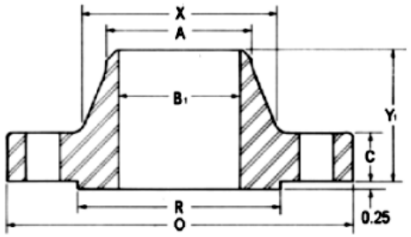

Weld Neck

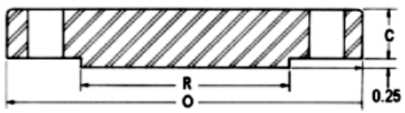

Blind

Dimensions: mm | NPS labels unchanged | Hole entries: count x diameter (mm) | Source page 20

NPS	OD O	WN thick C	BL thick C	LTH Y	Base dia X	Bevel dia A	RF OD R	Bolt circle	Hole count	Hole dia	WN weight*	BL weight*
26	889.00	111.25	111.25	180.85	698.50	660.40	726.95	806.45	28	44.45	550	1,194
28	952.50	115.82	115.82	190.50	752.35	711.20	784.35	863.60	28	47.75	650	1,427
30	1022.35	125.48	127.00	204.72	806.45	762.00	841.25	927.10	28	50.80	810	1,802
32	1085.85	130.05	134.87	215.90	860.55	812.80	895.35	984.25	28	53.85	950	2,159
34	1162.05	141.22	144.27	233.43	914.40	863.60	952.50	1054.10	24	60.45	1,205	2,645
36	1212.85	146.05	150.88	242.82	968.25	914.40	1009.65	1104.90	28	60.45	1,340	3,013
38	1270.00	152.40	155.45	254.00	1022.35	965.20	1054.10	1162.05	28	60.45	1,470	3,404
40	1320.80	158.75	162.05	263.65	1073.15	1016.00	1111.25	1212.85	32	60.45	1,630	3,838
42	1403.35	168.15	171.45	279.40	1127.25	1066.80	1168.40	1282.70	28	66.55	2,030	4,585
44	1454.15	172.97	177.80	289.05	1181.10	1117.60	1225.55	1333.50	32	66.55	2,160	5,105
46	1511.30	179.32	185.67	299.97	1234.95	1168.40	1276.35	1390.65	32	66.55	2,410	5,758
48	1593.85	188.98	195.33	315.98	1289.05	1219.20	1333.50	1460.50	32	73.15	2,855	6,737
50	1670.05	196.85	203.20	328.68	1343.15	1270.00	1384.30	1524.00	28	79.25	3,330	7,695
52	1720.85	203.20	209.55	336.55	1393.95	1320.80	1435.10	1574.80	32	79.25	3,560	8,426
54	1778.00	209.55	217.42	349.25	1447.80	1371.60	1492.25	1631.95	32	79.25	3,920	9,333
56	1854.20	217.42	225.55	361.95	1501.65	1422.40	1543.05	1695.45	32	85.85	4,280	10,529
58	1905.00	222.25	231.65	369.82	1552.45	1473.20	1600.20	1746.25	32	85.85	4,640	11,414
60	1993.90	233.43	242.82	388.87	1609.85	1524.00	1657.35	1822.45	28	91.95	5,000	13,108

Note: Nonlisted and intermediate sizes require separate dimensional confirmation.

Converted from rounded source inch values; NOT a DIN/EN substitution or certified ASME metric table.
Diagram callouts: 1/16 in = 1.5875 mm; 1/8 in = 3.175 mm; 1/4 in = 6.35 mm. NPS is a nominal label.
CHECK = confirm ambiguous source cell. By buyer / dash = not specified. Confirm approved drawing before ordering.
* Weights retain source values; weight unit is not stated on this source page: confirm separately.

ANSI B16.47 Series B Class 900 Flanges - mm

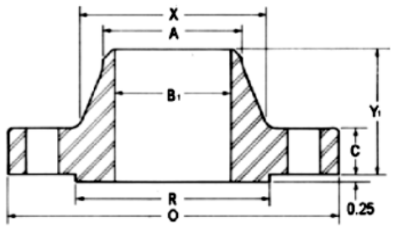

Weld Neck

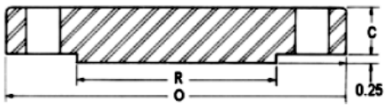

Blind

Dimensions: mm | NPS labels unchanged | Hole entries: count x diameter (mm) | Source page 21

NPS	OD O	WN thick C	BL thick C	LTH Y	Base dia X	Bevel dia A	RF OD R	Bolt circle	Hole count	Hole dia	WN weight*	BL weight*
26	1022.35	134.87	153.92	258.83	742.95	660.40	762.00	901.70	20	66.55	1,050	2,184
28	1104.90	147.57	166.62	276.35	797.05	711.20	819.15	971.55	20	73.15	1,520	2,762
30	1181.10	155.45	176.02	289.05	850.90	762.00	876.30	1035.05	20	79.25	1,820	3,334
32	1238.25	160.27	185.67	303.28	908.05	812.80	927.10	1092.20	20	79.25	2,065	3,865
34	1314.45	171.45	195.07	319.02	962.15	863.60	990.60	1155.70	20	85.85	2,450	4,576
36	1346.20	172.97	201.68	325.37	1016.00	914.40	1028.70	1200.15	24	79.25	2,520	4,963
38	1460.50	190.50	215.90	352.55	1073.15	965.20	1098.55	1289.05	20	91.95	3,385	6,253
40	1511.30	196.85	223.77	363.47	1127.25	1016.00	1162.05	1339.85	24	91.95	3,620	6,940
42	1562.10	206.25	231.65	371.35	1176.27	1066.80	1212.85	1390.65	24	91.95	3,960	7,675
44	1647.95	214.38	242.82	390.65	1234.95	1117.60	1270.00	1463.55	24	98.55	4,300	8,954
46	1733.55	225.55	255.52	410.97	1292.35	1168.40	1333.50	1536.70	24	104.65	4,640	10,426
48	1784.35	233.43	263.65	419.10	1343.15	1219.20	1384.30	1587.50	24	104.65	4,980	11,398

Note: Nonlisted and intermediate sizes require separate dimensional confirmation.

Converted from rounded source inch values; NOT a DIN/EN substitution or certified ASME metric table.
Diagram callouts: 1/16 in = 1.5875 mm; 1/8 in = 3.175 mm; 1/4 in = 6.35 mm. NPS is a nominal label.
CHECK = confirm ambiguous source cell. By buyer / dash = not specified. Confirm approved drawing before ordering.
* Weights retain source values; weight unit is not stated on this source page: confirm separately.

SHRI PARVATI INDUSTRIES

JIS FLANGES

Dimensional reference tables

ANSI / JIS / DIN / EN 1092-1 / BS

Reference data from the supplied technical catalogue.

Verify dimensions against the specified standard edition and approved project drawing before procurement.

This reference is not a declaration of stocked sizes, material grades or service suitability.

Dimensions, drawings, units and technical footnotes on the following table pages have been preserved.

JIS Flanges 2 kg/cm^2

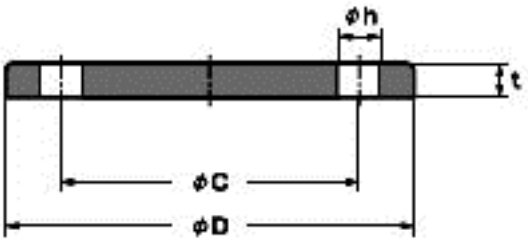

Blind

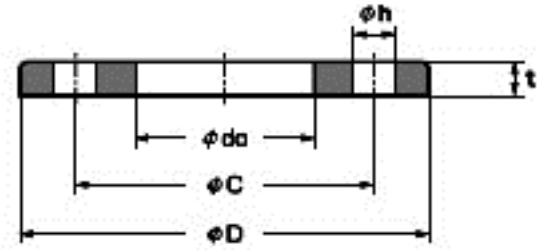

Slip-On

Pipe		Pipe	D	do	t	C	Holes	ψh
inch	mm							
18	450	457.2	605	460	22	555	16	23
20	500	508.0	655	511	22	605	20	23
22	550	558.0	720	562	24	665	20	25
24	600	609.6	770	613	24	715	20	25
26	650	660.4	825	664	24	770	24	25
28	700	711.2	875	715	24	820	24	25
30	750	762.0	945	766	24	880	24	27
32	800	812.8	995	817	24	930	24	27
34	850	863.6	1045	868	24	980	24	27
36	900	914.4	1095	919	24	1030	24	27
40	1000	1016.0	1195	1021	26	1130	28	27
44	1100	1117.6	1305	1122	26	1240	28	27
48	1200	1219.2	1420	1224	26	1350	32	27
54	1350	1371.6	1575	1376	26	1505	32	27
60	1500	1524.0	1730	1529	28	1660	36	27

JIS Flanges 5 kg/cm^2

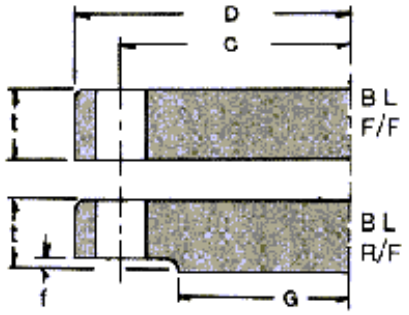

Blind

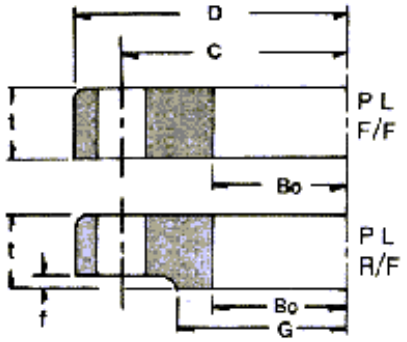

Plate

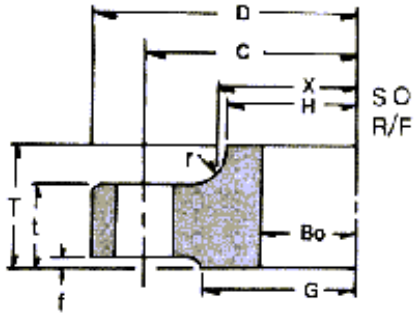

Slip-On

Pipe		Pipe	Bo		D		t		T		G		f	r	H		X		C		Holes	Bolt Dia.
inch	mm																					
3/8	10	17.3	17.8		75		9		-		42		1	-	-		-		55		4	12
1/2	15	21.7	22.2		80		9		-		48		1	-	-		-		60		4	12
3/4	20	27.2	27.7		85		10		-		52		1	-	-		-		65		4	12
1	25	34.0	34.5		95		10		-		62		1	-	-		-		75		4	12
1-1/4	32	42.7	43.2	+0.5 -0	115		12		-		72		2	-	-		-		90		4	15
1-1/2	40	48.6	49.1		120		12		-		78		2	-	-		-		95		4	15
2	50	60.5	61.1		130	+1.0 -0	14		-		88	±0.8	2	-	-		-		105	±0.5	4	15
2-1/2	65	76.3	77.1		155		14	+1.0 -0	-		112		2	-	-		-		130		4	15
3	80	89.1	90.0		180		14		-		125		2	-	-		-		145		4	19
3-1/2	90	101.6	102.6		190		14		-		135		2	-	-		-		155		4	19
4	100	114.3	115.4		200		16		-		145		2	-	-		-		165		8	19
5	125	139.8	141.2		235		16		-		180		2	-	-	+2.0 -0	-	+2.0 -0	200		8	19
6	150	165.2	166.6		265		18		-		210		2	-	-		-		230		8	19
7	175	190.7	192.1	+1.0 -0	300		18		-	±1.0	235		2	-	-		-		260		8	23
8	200	216.3	218.0		320		20		-		255		2	-	-		-		280		8	23
9	225	241.8	243.7		345		20		-		280		2	-	-		-		305		12	23
10	250	267.4	269.5		385	+1.5 -0	22		32		320		2	5	286		290		345	±0.6	12	23
12	300	318.5	321.0		430		22		34		365	±0.9	3	5	338		342		390		12	23
14	350	355.6	358.1		480		24		36		405		3	5	378		382		435		12	25
16	400	406.4	409.0		540		24		36		465		3	5	432		436		495		16	25
18	450	457.2	460.0	+1.5 -0	605		24		40		525		3	5	495		500		555		16	25
20	500	508.0	511.0		655		24		40		575		3	5	546		552		605		20	25
22	550	558.8	562.0		720		26		42		630		3	5	597		603		665		20	27
24	600	609.6	613.0		770	+2.0 -0	26		44		680		3	5	648		654		715	±0.8	20	27
26	650	660.4	664.0	+2.0 -0	825		26		48		735		3	5	702		708	+2.5 -0	770		24	27
28	700	711.2	715.0		875		26	+1.5 -0	48		785		3	5	751	+2.5 -0	758		820		24	27
30	750	762.0	766.0		945		28		52		840	±1.0	3	5	802		810		880		24	33
32	800	812.8	817.0		995		28		52		890		3	5	854		862		930		24	33
34	850	863.6	868.0	+2.5 -0	1045		28		54		940		3	5	904	+3.0 -0	912	+3.0 -0	980		24	33
36	900	914.4	919.0		1095		30		56		990		3	5	956		964		1030		24	33
40	1000	1016.0	1021.0		1195	+2.5 -0	32		60	±1.5	1090		3	5	1058		1066		1130	±1.0	28	33
44	1100	1117.6	1123.0		1305		32		-		1200		3	-	-		-		1240		28	33
48	1200	1219.2	1224.0	+3.0 -0	1420		34		-		1305	±1.2	3	-	-	+3.5 -0	-	+3.5 -0	1350		32	33
54	1350	1371.6	1377.0		1575	+3.0 -0	34		-		1460		3	-	-		-		1505	±1.5	32	33
60	1500	1524.0	1529.0		1730		36		-		1615		3	-	-		-		1660		36	33

JIS Flanges 10 kg/cm^2

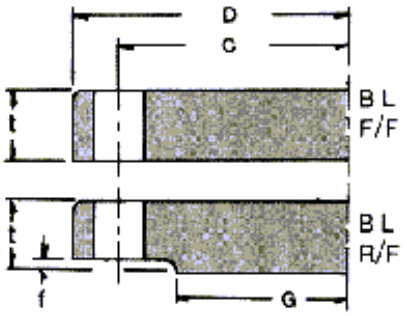

Blind

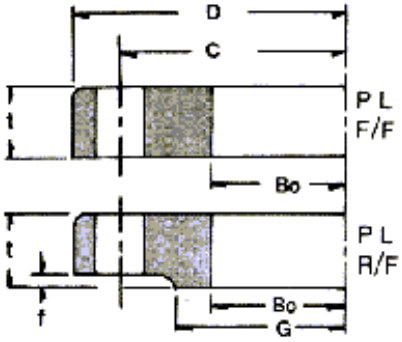

Plate

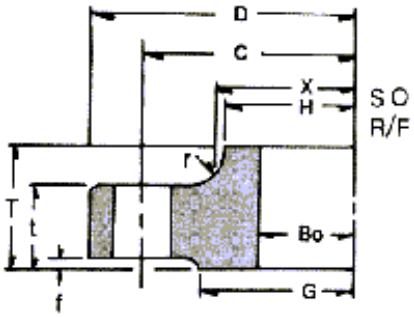

Slip-On

Pipe inch	Pipe mm	Pipe	Bo		D		t		T		G		f	r	H		X		C		Holes	Bolt Dia.
3/8	10	17.3	17.8		90		12		-		48		1	-	-		-		65		4	15
1/2	15	21.7	22.2		95		12		-		52		1	-	-		-		70		4	15
3/4	20	27.2	27.7		100		14		-		58		1	-	-		-		75		4	15
1	25	34.0	34.5	+0.5 -0	125		14		-		70		1	-	-		-		90		4	19
1-1/4	32	42.7	43.2		135		16		-		80		2	-	-		-		100		4	19
1-1/2	40	48.6	49.1		140	+1.0 -0	16	+1.0 -0	-		85		2	-	-		-		105		4	19
2	50	60.5	61.1		155		16		-		100	±0.8	2	-	-		-		120	±0.5	4	19
2-1/2	65	76.3	77.1		175		18		-		120		2	-	-		-		140		4	19
3	80	89.1	90.0		185		18		-		130		2	-	-		-		150		8	19
3-1/2	90	101.6	102.6		195		18		-		140		2	-	-	+1.5 -0	-	+1.5 -0	160		8	19
4	100	114.3	115.4		210		18		-	±1.0	155		2	-	-		-		175		8	19
5	125	139.8	141.2		250		20		-		185		2	-	-		-		210		8	23
6	150	165.2	166.6		280		22		-		215		2	-	-		-		240		8	23
7	175	190.7	192.1	+1.0 -0	305		22		32		240		2	6	208		212		265		12	23
8	200	216.3	218.0		330		22		32		265		2	6	234		238		290		12	23
9	225	241.8	243.7		350		22		34		285		2	6	260		264		310		12	23
10	250	267.4	269.5		400	+1.5 -0	24		36		325		2	6	288		292		355	±0.6	12	25
12	300	318.5	321.0		445		24		38		370	±0.9	3	6	340		346		400		16	25
14	350	355.6	358.1		490		26		42		415		3	6	380		386		445		16	25
16	400	406.4	409.0		560		28		44		475		3	6	436		442		510		16	27
18	450	457.2	460.0	+1.5 -0	620		30		48		530		3	6	496		502		565		20	27
20	500	508.0	511.0		675		30		48		585		3	6	548	+2.0 -0	554	+2.0 -0	620		20	27
22	550	558.8	562.0		745		32		52		640		3	6	604		610		680		20	33
24	600	609.6	613.0		795	+2.0 -0	32	+1.5 -0	52		690		3	6	656		662		730	±0.8	24	33
26	650	660.4	664.0	+2.0 -0	845		34		56		740		3	6	706	+2.5 -0	712	+2.5 -0	780		24	33
28	700	711.2	715.0		905		34		58		800	±1.0	3	6	762		770		840		24	33
30	750	762.0	766.0		970		36		62		855		3	6	816		824		900		24	33
32	800	812.8	817.0	+2.5 -0	1020		36		64		905		3	6	868	+3.0 -0	876	+3.0 -0	950		28	33
34	850	863.6	868.0		1070		36		66	±1.5	955		3	6	920		928		1000		28	33
36	900	914.4	919.0		1120	+2.5 -0	38		70		1005		3	6	971		979		1050	±1.0	28	33
40	1000	1016.0	1021.0		1235		40		74		1110		3	6	1073		1081		1160		28	39
44	1100	1117.6	1123.0	+3.0 -0	1345		42		78		1220	±1.2	3	8	1175	+3.5 -0	1185	+3.5 -0	1270		28	39
48	1200	1219.2	1224.0		1465		44		82		1325		3	8	1278		1290		1380		32	39
54	1350	1371.6	1377.0		1630	+3.0 -0	48		88		1480		3	8	1432		1450		1540	±1.5	36	45
60	1500	1524.0	1529.0		1795		50		90		1635		3	8	1585		1600		1700		40	45

JIS Flanges 16 kg/cm^2

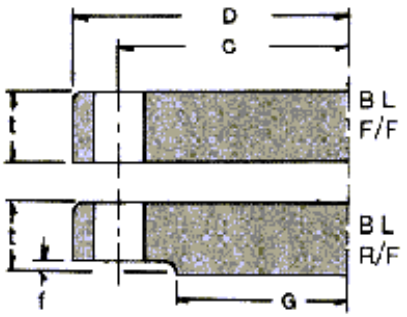

Blind

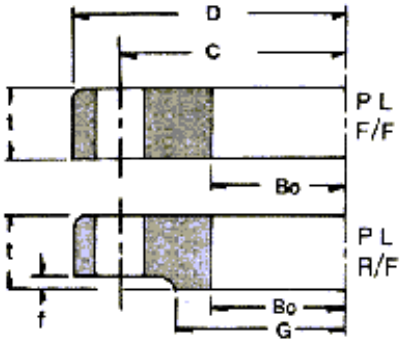

Plate

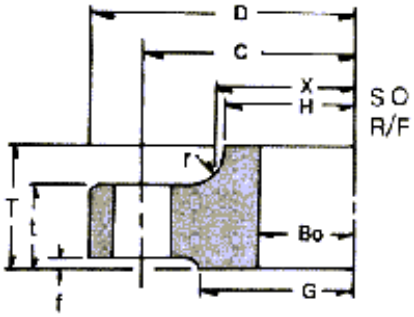

Slip-On

Pipe inch	Pipe mm	Pipe	Bo		D		t		T		G		f	r	H		X		C		Holes	Bolt Dia.
3/8	10	17.3	17.8		90		12		16		48		1	4	26		28		65		4	15
1/2	15	21.7	22.2		95		12		16		52		1	4	30		32		70		4	15
3/4	20	27.2	27.7		100		14		20		58		1	4	38		42		75		4	15
1	25	34.0	34.5		125		14		20		70		1	4	46		50		90		4	19
1-1/4	32	42.7	43.2	+0.5 -0	135		16	+1.0	22		80		2	5	56		60		100		4	19
1-1/2	40	48.6	49.1		140	+1.0 -0	16		24		85	±0.8	2	5	62		66		105		4	19
2	50	60.5	61.1		155		16		24		100		2	5	76	+1.0 -0	80	+1.0 -0	120	±0.5	8	19
2-1/2	65	76.3	77.1		175		18		26		120		2	5	94		98		140		8	19
3	80	89.1	90.0		200		20		28		135		2	6	108		112		160		8	23
3-1/2	90	101.6	102.6		210		20		30	±1.0	145		2	6	120		124		170		8	23
4	100	114.3	115.4		225		22		34		160		2	6	134		138		185		8	23
5	125	139.8	141.2		270		22		34		195		2	6	164		170		225		8	25
6	150	165.2	166.6		305		24		38		230		2	6	196		202		260		12	25
7	175	190.7	192.1	+1.0 -0	325		26		40		250		2	6	216		222		280		12	25
8	200	216.3	218.0		350		26		40		275		2	6	244		252		305		12	25
9	225	241.8	243.7		385	+1.5 -0	26		40		325		2	6	266		272	+1.5 -0	335		12	27
10	250	267.4	269.5		430		28		44		345		2	6	304	+1.5 -0	312		380	±0.6	12	27
12	300	318.5	321.0		480		30	+1.5 -0	48		395	±0.9	3	8	354		364		430		16	27
14	350	355.6	358.1		540		34		52		440		3	8	398		408		480		16	33
16	400	406.4	409.0		605		38		60		495		3	10	446		456		540		16	33
18	450	457.2	460.0	+1.5 -0	675		40		64		560		3	10	504		514	+2.0 -0	605		20	33
20	500	508.0	511.0		730		42		68		615		3	10	558	+2.0 -0	568		660		20	33
22	550	558.8	562.0		795	+2.0 -0	44		70		670		3	10	612		622		720		20	39
24	600	609.6	613.0		845		46		74		720		3	10	666		676		770	±0.8	24	39
26	650	660.4	664.0	+2.0 -0	895		48		77	±1.5	770		5	10	704	+2.5 -0	726	+2.5 -0	820		24	39
28	700	711.2	715.0		960		50		80		820	±1.0	5	10	754		776		875		24	42
30	750	762.0	766.0		1020		52		83		880		5	10	806		832		935		24	42
32	800	812.8	817.0	+2.5 -0	1085		54		86		930		5	10	865	+3.0 -0	885	+3.0 -0	990		24	48
34	850	863.6	868.0		1135	+2.5 -0	56		89		980		5	10	916		936		1040		24	48
36	900	914.4	919.0		1185		58		93		1030		5	10	968		986		1090	±1.0	28	48
40	1000	1016.0	1021.0		1320		62	+2.0 -0	99		1140		5	12	1070		1098		1210		28	56
44	1100	1117.6	1123.0		1420		66		105		1240		5	12	1180		1200		1310		32	56
48	1200	1219.2	1225.0	+3.0 -0	1530		70		112		1350	±1.2	5	12	1282	+3.5 -0	1302	+3.5 -0	1420		32	56
52	1300	1320.8	1326.0		1645	+3.0 -0	74		-	±2.0	1450		5	-	-		-		1530		32	62
54	1350	1371.6	1377.0		1700		76		-		1510		5	-	-		-		1590	±1.5	32	62
56	1400	1422.4	1428.0		1755		78		-		1560		5	-	-		-		1640		36	62
60	1500	1524.0	1529.0		1865		80		-		1670		5	-	-		-		1750		36	62

JIS Flanges 20 kg/cm^2

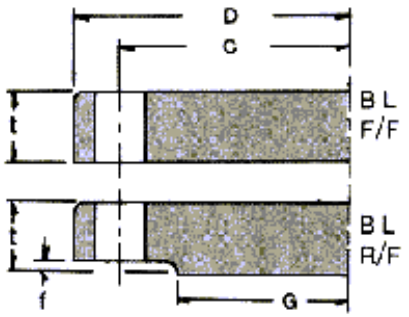

Blind

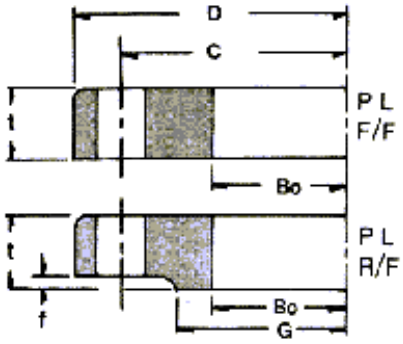

Plate

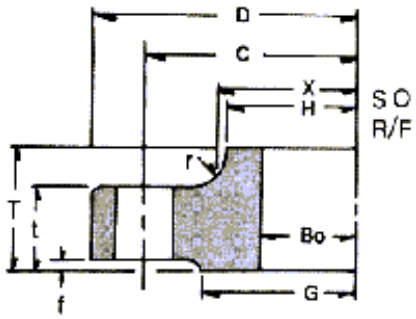

Slip-On

Pipe inch	Pipe mm	Pipe	Bo		D		t		T		G		f	r	H		X		C		Holes	Bolt Dia.
3/8	10	17.3	17.8		90		14		20		48		1	4	30		32		65		4	15
1/2	15	21.7	22.2		95		14		20		52		1	4	34		36		70		4	15
3/4	20	27.2	27.7		100		16		22		58		1	4	40		42		75		4	15
1	25	34.0	34.5		125		16		24		70		1	4	48		50		90		4	19
1-1/4	32	42.7	43.2	+0.5 -0	135		18	+1.0	26		80		2	5	56		60		100		4	19
1-1/2	40	48.6	49.1		140	+1.0 -0	18		26		85	±0.8	2	5	62		66	+1.0 -0	105	±0.5	4	19
2	50	60.5	61.1		155		18		26		100		2	5	76	+1.0 -0	80		120		8	19
2-1/2	65	76.3	77.1		175		20		30		120		2	5	100		104		140		8	19
3	80	89.1	90.0		200		22		34	±1.0	135		2	6	113		117		160		8	23
3-1/2	90	101.6	102.6		210		24		36		145		2	6	126		130		170		8	23
4	100	114.3	115.4		225		24		36		160		2	6	138		142		185		8	23
5	125	139.8	141.2		270		26		40		195		2	6	166		172		225		8	25
6	150	165.2	166.6		305		28		42		230		2	6	196		202		260		12	25
7	175	190.7	192.1	+1.0 -0	325		30		46		250		2	6	218		226		280		12	25
8	200	216.3	218.0		350		30	+1.5 -0	46		275		2	6	244		252		305		12	25
9	225	241.8	243.7		385	+1.5 -0	32		48		300		2	6	266		274	+1.5 -0	335	±0.6	12	27
10	250	267.4	269.5		430		34		52		345		2	6	304	+1.5 -0	312		380		12	27
12	300	318.5	321.0		480		36		56		395	±0.9	3	8	354		364		430		16	27
14	350	355.6	358.1		540		40		62		440		3	8	398		408		480		16	33
16	400	406.4	409.0		605		46		70		495		3	10	446		456		540		16	33
18	450	457.2	460.0	+1.5 -0	675		48		78		560		3	10	504	+2.0 -0	514	+2.0 -0	605		20	33
20	500	508.0	511.0		730	+2.0 -0	50		84		615		3	10	558		568		660		20	33
22	550	558.8	562.0		795		52		90	±1.5	670		3	10	612		622		720	±0.8	20	39
24	600	609.6	613.0		845		54		96		720		3	10	666		676		770		24	39
26	650	660.4	664.0	+2.0 -0	945		60		-		790	±1.0	5	-	-		-		850		24	48
28	700	711.2	715.0		995		64	+2.0 -0	-		840		5	-	-	+2.5 -0	-	+2.5 -0	900		24	48
30	750	762.0	766.0		1080		68		-		900		5	-	-		-		970		24	56
32	800	812.8	817.0		1140	+2.5 -0	72		-		960		5	-	-		-		1030	±1.0	24	56
34	850	863.6	868.0	+2.5 -0	1200		74		-		1020	±1.2	5	-	-		-		1090		24	56
36	900	914.4	919.0		1250		76		-		1070		5	-	-		-		1140		28	56

JIS Flanges 30 kg/cm^2

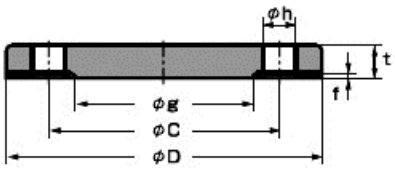

Blind

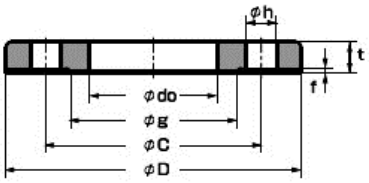

Plate

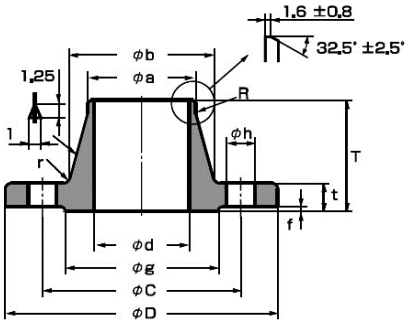

Weld Neck

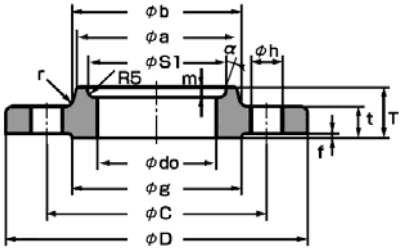

Slip-On (Type A)

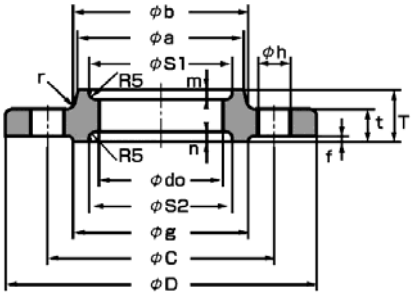

Slip-On (Type B)

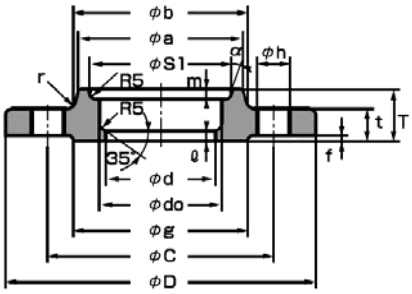

Slip-On (Type C)

Pipe		Pipe	D	t	f	g	C	Holes	h	Plate、Slip-On						Weld Neck						Slip-On Type A、B、C					
inch	Mm									do	T	a	b	r	d	d	a	b	T	R	r	S1	m	S2	n	a	ℓ
3/8	10	17.3	110	16	1	52	75	4	19	17.8	24	30	34	4	-	-	-	-	-	-	-	27	4	27	4	-	-
1/2	15	21.7	115	18	1	55	80	4	19	22.2	26	36	40	5	-	16.1	21.7	40	45	20	6	31	4	40	5	-	-
3/4	20	27.2	120	18	1	60	85	4	19	27.7	28	42	46	5	-	21.4	27.2	44	45	20	6	37	5	44	5	-	-
1	25	34.0	130	20	1	70	95	4	19	34.5	30	50	54	5	-	27.2	34.0	52	48	20	6	44	6	52	5	-	-
1-1/4	32	42.7	140	22	2	80	105	4	19	43.2	32	60	64	6	-	35.5	42.7	62	52	30	6	52	6	60	5	-	-
1-1/2	40	48.6	160	22	2	90	120	4	23	49.1	34	66	70	6	-	41.2	48.6	70	54	30	6	58	6	66	5	-	-
2	50	60.5	165	22	2	105	130	8	19	61.1	36	82	86	6	-	52.7	60.5	84	57	30	8	70	6.5	78	5	-	-
2-1/2	65	76.3	200	26	2	130	160	8	23	77.1	40	102	106	8	65.9	65.9	76.3	104	69	30	8	96	9.5	-	-	20°	6
3	80	89.1	210	28	2	140	170	8	23	90.0	44	115	121	8	78.1	78.1	89.1	118	73	30	8	109	9.5	-	-	20°	6
3-1/2	90	101.6	230	30	2	150	185	8	25	102.6	46	128	134	8	90.2	90.2	101.6	130	74	30	8	122	9.5	-	-	20°	6
4	100	114.3	240	32	2	160	195	8	25	115.4	48	141	147	8	102.3	102.3	114.3	142	76	30	8	135	9.5	-	-	20°	6
5	125	139.8	275	36	2	195	230	8	25	141.2	54	166	172	8	126.6	126.6	139.8	172	86	50	10	160	9.5	-	-	20°	6
6	150	165.2	325	38	2	235	275	12	27	166.6	58	196	204	8	151.0	151.0	165.2	202	95	50	10	186	9.5	-	-	20°	6
8	200	216.3	370	42	2	280	320	12	27	218.0	64	248	256	8	199.9	199.9	216.3	254	102	50	10	237	9.5	-	-	20°	6
10	250	267.4	450	48	2	345	390	12	33	269.5	72	306	314	10	248.8	248.8	267.4	312	118	50	12	290	10	-	-	20°	6
12	300	318.5	515	52	3	405	450	16	33	321.0	78	360	370	10	297.9	297.9	318.5	366	127	50	15	345	12	-	-	30°	6
14	350	355.6	560	54	3	450	495	16	33	358.1	84	402	412	12	333.4	333.4	355.6	406	134	80	15	383	13	-	-	30°	6
16	400	406.4	630	60	3	510	560	16	39	409.0	92	456	468	15	381.0	381.0	406.4	462	149	80	20	435	14	-	-	30°	7

JIS Flanges 40 kg/cm^2

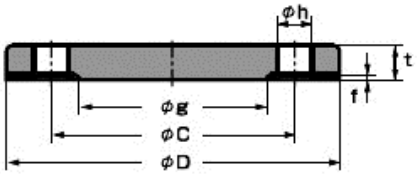

Blind

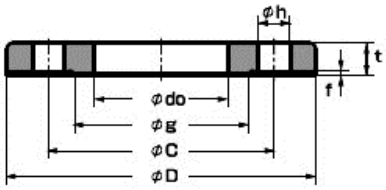

Plate

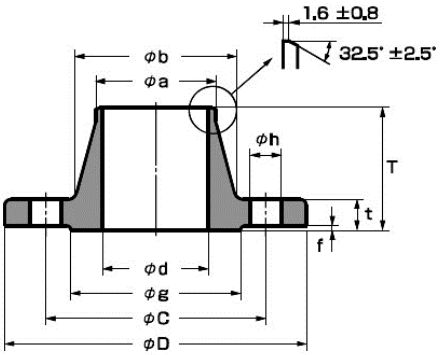

Weld Neck

Pipe		Pipe	D	do	t	f	g	c	Holes	h	Weld Neck			
inch	mm										d	a	b	T
3/8	10	17.3	110	17.8	18	1	52	75	4	19	-	17.3	38	53
1/2	15	21.7	115	22.2	20	1	55	80	4	19	15.8	21.7	40	53
3/4	20	27.2	120	27.7	20	1	60	85	4	19	21.1	27.2	45	58
1	25	34.0	130	34.5	22	1	70	95	4	19	26.8	34.0	54	63
1-1/4	32	42.7	140	43.2	24	2	80	105	4	19	35.1	42.7	62	69
1-1/2	40	48.6	160	49.1	24	2	90	120	4	23	40.7	48.6	72	72
2	50	60.5	165	61.1	26	2	105	130	8	19	52.2	60.5	88	75
2-1/2	65	76.3	200	77.1	30	2	130	160	8	23	65.3	76.3	108	81
3	80	89.1	210	90.0	32	2	140	170	8	23	76.4	89.1	119	85
3-1/2	90	101.6	230	102.6	34	2	150	185	8	25	89.5	101.6	130	88
4	100	114.3	250	115.4	36	2	165	205	8	25	101.5	114.3	146	104
5	125	139.8	300	141.2	40	2	200	250	8	27	-	-	-	-
6	150	165.2	355	166.6	44	2	240	295	12	33	150.0	165.2	215	120
8	200	216.3	405	218.0	50	2	290	345	12	33	198.7	216.3	270	135
10	250	267.4	475	269.5	56	2	355	410	12	33	247.5	267.4	333	154
12	300	318.5	540	321.0	60	2	410	470	16	39	296.4	318.5	400	159
14	350	355.6	585	358.1	64	3	455	515	16	39	331.8	355.6	432	168
16	400	406.4	645	409.0	70	3	515	570	16	39	379.1	406.4	466	181

JIS Flanges 63 kg/cm^2

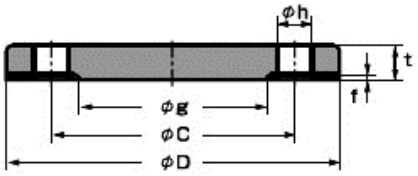

Blind

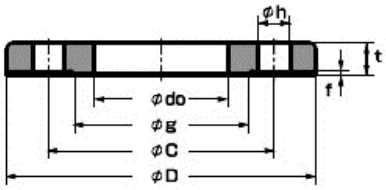

Plate

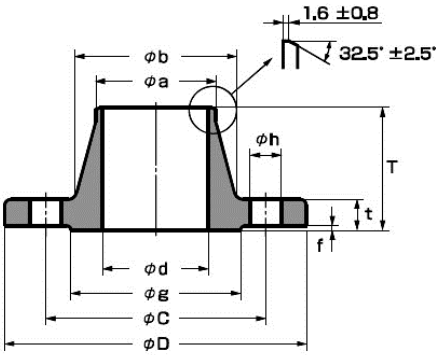

Weld Neck

Pipe		Pipe	D	do	t	F	g	c	Holes	h	Weld Neck			
inch	mm										d	a	b	T
3/8	10	17.3	115	17.8	23	1	52	80	4	19	-	17.3	40	61
1/2	15	21.7	120	22.2	23	1	55	85	4	19	15.8	21.7	42	61
3/4	20	27.2	135	27.7	25	1	60	95	4	23	21.1	27.2	46	71
1	25	34.0	140	34.5	27	1	70	100	4	23	26.8	34.0	56	74
1-1/4	32	42.7	150	43.2	30	2	80	110	4	23	35.1	42.7	60	75
1-1/2	40	48.6	175	49.1	32	2	90	130	4	25	40.7	48.6	75	85
2	50	60.5	185	61.1	34	2	105	145	8	25	52.2	60.5	92	104
2-1/2	65	76.3	220	77.1	38	2	130	175	8	25	65.3	76.3	118	107
3	80	89.1	230	90.0	40	2	140	185	8	25	76.4	89.1	130	120
3-1/2	90	101.6	255	102.6	42	2	150	205	8	27	89.5	101.6	140	126
4	100	114.3	270	115.4	44	2	165	220	8	27	101.5	114.3	154	126
5	125	139.8	325	141.2	50	2	200	265	8	33	-	-	-	-
6	150	165.2	365	166.6	54	2	240	305	12	33	150.0	165.2	230	173
8	200	216.3	425	218.0	60	2	290	360	12	33	198.7	216.3	280	215
10	250	267.4	500	269.5	68	2	355	430	12	39	247.5	267.4	348	256
12	300	318.5	560	321.0	77	3	410	485	16	39	296.4	318.5	402	286
14	350	355.6	615	358.1	81	3	455	530	16	46	331.8	355.6	438	301
16	400	406.4	680	409.0	89	3	515	590	16	46	379.1	406.4	490	314

SHRI PARVATI INDUSTRIES

DIN FLANGES

Dimensional reference tables

ANSI / JIS / DIN / EN 1092-1 / BS

Reference data from the supplied technical catalogue.

Verify dimensions against the specified standard edition and approved project drawing before procurement.

This reference is not a declaration of stocked sizes, material grades or service suitability.

Dimensions, drawings, units and technical footnotes on the following table pages have been preserved.

DIN Flanges Summary Chart

Flange Type	Pressure Rating (PN)											
	2.5	6	10	16	25	40	64	100	160	250	320	400
	Flange Code (DIN)											
Blind flange		2527	2527	2527	2527	2527	2527	2527				
Flat flange for welding (slip on)		2573	2576	2502 2543	2503 2544	2503 2545						
Welding neck flange	2630	2631	2632	2633	2634	2635	2636	2637	2638	2628	2629	2627
Lapped (lapped joint) flange, Plain collar		2641	2642		2655	2656						
Loose flange and ring for welding		2652	2653									
Loose flange and ring with neck for welding			2673									
Threaded flange with neck		2565		2566	2567	2567	2568	2569				
Long neck welding flange			28115		28115							
Hubbed slip-on Flange for welding			86029	86030								

DIN 2502 Flat Flange For Welding (Slip On) PN16

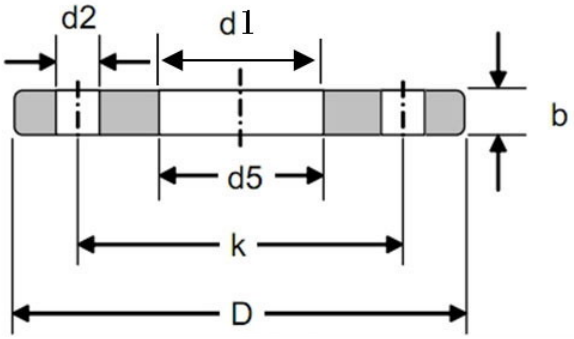

DN	ISO	DIN (d1)	d5	D	b	k	No. of Holes	d2	KG
10	-	14.0	14.5	90	16	60	4	14	0.61
	17.2	-	17.7	90	16	60	4	14	0.60
15	-	20.0	21.0	95	16	65	4	14	0.67
	21.3	-	22.0	95	16	65	4	14	0.67
20	-	25.0	26.0	105	18	75	4	14	0.94
	26.9	-	27.6	105	18	75	4	14	0.94
25	-	30.0	31.0	115	18	85	4	14	1.13
	33.7	-	34.4	115	18	85	4	14	1.11
32	-	38.0	39.0	140	18	100	4	18	1.66
	42.4	-	43.1	140	18	100	4	18	1.62
40	-	44.5	45.5	150	18	110	4	18	1.89
	48.3	-	49.0	150	18	110	4	18	1.85
50	-	57.0	58.1	165	18	125	4	18	2.50
	60.3	-	61.1	165	18	125	4	18	2.46
65	76.1	-	77.1	185	22	145	8	18	2.99
80	88.9	-	90.3	200	24	160	8	18	3.61
100	-	108.0	109.6	220	20	180	8	18	4.17
	114.3	-	115.9	220	20	180	8	18	3.99
125	-	133.0	134.8	250	22	210	8	18	5.66
	139.7	-	141.6	250	22	210	8	18	5.41
150	-	159.0	161.1	285	22	240	8	22	6.97
	168.2	-	170.5	285	22	240	8	22	6.55
175	193.7	-	196.10	315	24	270	8	22	8.42
200	219.1	-	221.8	340	24	295	12	22	8.97
250	-	267.0	270.2	405	26	355	12	26	13.29
	273.0	-	276.2	405	26	355	12	26	12.76
300	323.9	-	327.6	460	28	410	12	26	16.60
350	355.6	-	359.7	520	30	470	16	26	24.08
	-	368	372.2	520	30	470	16	26	22.39
400	406.4	-	411.0	580	32	525	16	30	30.20
	-	419	423.7	580	32	525	16	30	28.11
450	457.0	-	462.3	640	38	585	20	30	41.67
500	508.0	-	513.6	715	38	650	20	33	52.87
600	610.0	-	616.5	840	42	770	20	36	77.58
700	711.0	-	716.0	910	44	840	24	36	77.13
800	813.0	-	818.0	1025	50	950	24	39	106.35
900	914.0	-	920.0	1125	54	1050	28	39	125.39
1000	1016.0	-	1022.0	1255	60	1170	28	42	177.99

Dimensions in millimeter (mm).
For DN10-DN80 use PN40.

DIN 2503 Flat Flange For Welding (Slip On) PN25

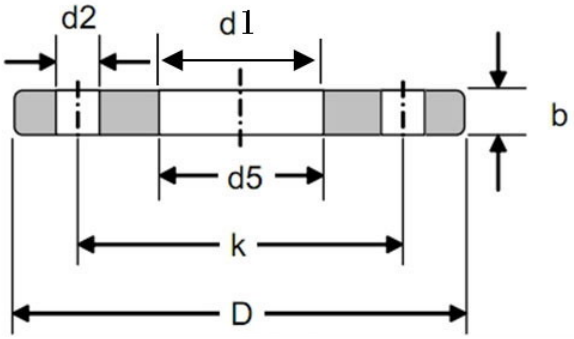

DN	Pipe OD		d5	D	b	k	No. of Holes	d2	KG
	ISO	DIN							
10	-	14.0	14.5	90	16	60	4	14	0.61
	17.2	-	17.7	90	16	60	4	14	0.60
15	-	20.0	21.0	95	16	65	4	14	0.67
	21.3	-	22.0	95	16	65	4	14	0.67
20	-	25.0	26.0	105	18	75	4	14	0.94
	26.9	-	27.6	105	18	75	4	14	0.94
25	-	30.0	31.0	115	18	85	4	14	1.13
	33.7	-	34.4	115	18	85	4	14	1.11
32	-	38.0	39.0	140	18	100	4	18	1.66
	42.4	-	43.1	140	18	100	4	18	1.62
40	-	44.5	45.5	150	18	110	4	18	1.89
	48.3	-	49.0	150	18	110	4	18	1.85
50	-	57.0	58.1	165	18	125	4	18	2.50
	60.3	-	61.1	165	18	125	4	18	2.46
65	76.1	-	77.1	185	22	145	8	18	2.99
80	88.9	-	90.3	200	24	160	8	18	3.61
100	-	108.0	109.6	235	24	190	8	22	5.82
	114.3	-	115.9	235	24	190	8	22	5.61
125	-	133.0	134.8	270	26	220	8	26	7.91
	139.7	-	141.6	270	26	220	8	26	7.83
150	-	159.0	161.1	300	28	250	8	26	10.12
	168.2	-	170.5	300	28	250	8	26	9.58
175	193.70	-	196.10	330	28	280	12	26	14.45
200	219.1	-	221.8	360	30	310	12	26	13.60
250	-	267.0	270.2	425	32	370	12	30	19.40
	273.0	-	276.2	425	32	370	12	30	18.45
300	323.9	-	327.6	485	34	430	16	30	23.79
350	355.6	-	359.7	555	38	490	16	33	33.77
	-	368	372.2	555	38	490	16	33	35.63
400	406.4	-	411.0	620	40	550	16	36	48.03
	-	419	423.7	620	40	550	16	36	45.41
500	508.0	-	513.6	730	44	660	20	36	65.97
600	610.0	-	616.5	845	50	770	20	39	93.57
700	711.0	-	716.0	960	52	875	24	42	117.53
800	813.0	-	818.0	1085	56	990	24	48	156.34
900	914.0	-	920.0	1185	62	1090	28	48	188.57
1000	1016.0	-	1022.0	1320	68	1210	28	58	255.79

Dimensions in millimeter (mm).
For DN10-DN150 use PN40.

DIN 2503 Flat Flange For Welding (Slip On) PN40

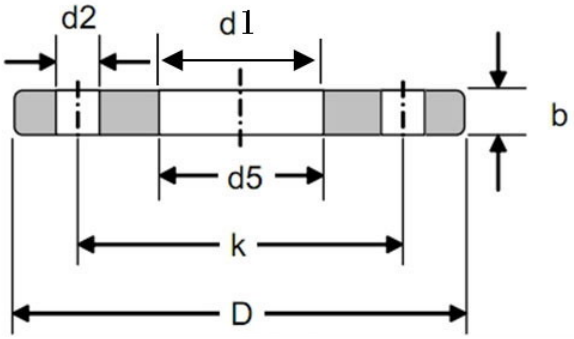

DN	Pipe OD		d5	D	b	k	No. of Holes	d2	KG
	ISO	DIN							
10	-	14.0	14.5	90	16	60	4	14	0.61
	17.2	-	17.7	90	16	60	4	14	0.60
15	-	20.0	21.0	95	16	65	4	14	0.67
	21.3	-	22.0	95	16	65	4	14	0.67
20	-	25.0	26.0	105	18	75	4	14	0.94
	26.9	-	27.6	105	18	75	4	14	0.94
25	-	30.0	31.0	115	18	85	4	14	1.13
	33.7	-	34.4	115	18	85	4	14	1.11
32	-	38.0	39.0	140	18	100	4	18	1.66
	42.4	-	43.1	140	18	100	4	18	1.62
40	-	44.5	45.5	150	18	110	4	18	1.89
	48.3	-	49.0	150	18	110	4	18	1.85
50	-	57.0	58.1	165	18	125	4	18	2.50
	60.3	-	61.1	165	18	125	4	18	2.46
65	76.1	-	77.1	185	22	145	8	18	2.99
80	88.9	-	90.3	200	24	160	8	18	3.61
100	-	108.0	109.6	235	24	190	8	22	5.82
	114.3	-	115.9	235	24	190	8	22	5.61
125	-	133.0	134.8	270	26	220	8	26	7.91
	139.7	-	141.6	270	26	220	8	26	7.83
150	-	159.0	161.1	300	28	250	8	26	10.12
	168.2	-	170.5	300	28	250	8	26	9.58
175	193.7	-	196.1	350	2	295	12	30	14.45
200	219.1	-	221.8	375	34	320	12	30	16.90
250	-	267.0	270.2	450	38	385	12	33	27.28
	273.0	-	276.2	450	38	385	12	33	26.51
300	323.9	-	327.6	515	42	450	16	33	36.38
350	355.6	-	359.7	580	46	510	16	36	52.83
	-	368.0	372.2	580	46	510	16	36	50.24
400	406.4	-	411.0	660	50	585	16	39	74.71
	-	419	423.7	660	50	585	16	39	71.44
500	508.0	-	513.6	755	52	670	20	42	86.87
600	610.0	-	616.5	890	54	795	20	48	121.84
700	711.0	-	716.0	995	58	900	24	48	150.93
800	813.0	-	818.0	1140	64	1030	24	58	219.08
900	914.0	-	920.0	1250	70	1140	28	58	271.16
1000	1016.0	-	1022.0	1360	78	1250	28	58	344.95

Dimensions in millimeter (mm).

DIN 2527 Blind Flange

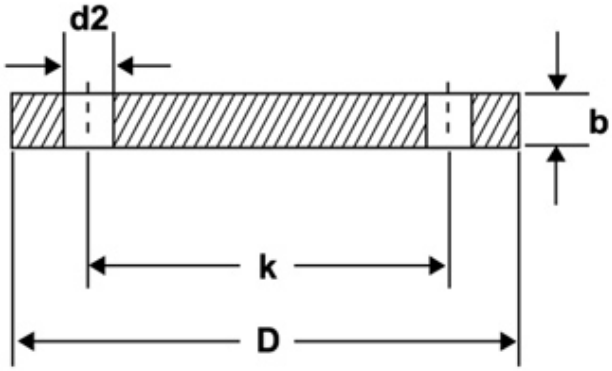

DIN	PN6						PN10				
	No. of holes	D	b	k	d2	KG	D	b	k	d2	KG
10	4	75	12	50	11	0.38	90	14	60	14	0.63
15	4	80	12	55	11	0.44	95	14	65	14	0.71
20	4	90	14	65	11	0.66	105	16	75	14	1.01
25	4	100	14	75	11	0.82	115	16	85	14	1.23
32	4	120	14	90	14	1.18	140	16	100	18	1.81
40	4	130	14	100	14	1.39	150	16	110	18	2.09
50	4	140	14	110	14	1.62	165	18	125	18	2.88
65	4	160	14	130	14	2.14	185	18	145	18	3.65
80	4	190	16	150	48	3.43	200	20	160	18	4.61
100	4	210	16	170	18	4.22	220	20	180	18	5.65
125	8	240	18	200	18	6.1	250	22	210	18	8.13
150	8	265	18	225	18	7.51	285	22	240	22	10.49
175	8	295	20	255	18	10.41	315	24	270	22	14.11
200	8	320	20	280	18	12.31	340	24	295	22	16.53
250	12	375	22	335	18	18.55	395	26	350	22	24.08
300	12	440	22	395	22	25.47	445	26	400	22	30.81
350	12	490	22	445	22	31.78	505	26	460	22	39.64
400	16	540	22	495	22	38.5	565	26	515	26	49.44
500	20	645	24	600	22	60.13	670	28	620	26	75.16
600	20	755	28	705	26	96.07	780	30	725	30	109.2
700	24	860	30	810	26	133.8	895	32	840	30	153.77
800	24	975	32	920	30	183.29	1015	36	950	33	222.86
900	24	1075	36	1020	30	251.7	1115	40	1050	33	299.08
1000	28	1175	42	1120	30	350.98	1230	46	1160	36	418.78

Dimensions in millimeter (mm).

DIN 2527 Blind Flange

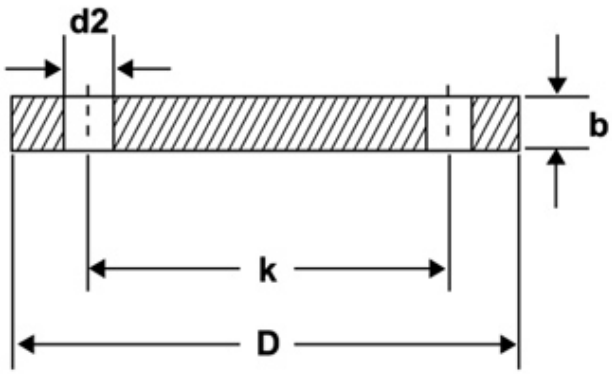

		PN16					PN25				
DIN	No. of holes	D	b	k	d2	KG	D	b	k	d2	KG
10	4	90	14	60	14	0.63	90	16	60	14	0.72
15	4	95	14	65	14	0.71	95	16	65	14	0.81
20	4	105	16	75	14	1.01	105	18	75	14	1.14
25	4	115	16	85	14	1.23	115	18	85	14	1.38
32	4	140	16	100	18	1.81	140	18	100	18	2.03
40	4	150	16	110	18	2.09	150	18	110	18	2.35
50	4	165	18	125	18	2.88	165	20	125	18	3.2
65	4	185	18	145	18	3.65	185	22	145	18	4.29
80	8	200	20	160	18	4.61	200	24	160	18	5.54
100	8	220	20	180	18	5.65	235	24	190	22	7.6
125	8	250	22	210	18	8.13	270	26	220	26	10.82
150	8	285	22	240	22	10.49	300	28	250	26	14.6
175	8	315	24	270	22	14.11	330	28	280	26	17.4
200	12	340	24	295	22	16.26	360	30	310	26	22.47
250	12	405	26	355	26	24.99	425	32	370	30	33.51
300	12	460	28	410	26	35.13	485	34	430	30	46.29
350	16	520	30	470	26	48.01	555	38	490	33	68.08
400	16	580	32	525	30	83.53	620	40	550	36	89.59
500	20	715	36	650	33	108.63	730	45	660	36	140.66
600	20	780	38	770	36	136.47	845	48	770	39	202.3
700	24	895	40	840	36	189.87	960	50	875	42	271.05
800	24	1015	44	950	39	269.57	1085	54	990	48	373.52
900	28	1115	48	1050	39	355.31	1185	58	1090	48	479.07
1000	28	1230	52	1170	42	469.2	1320	62	1210	56	632.47

Dimensions in millimeter (mm).

DIN 2527 Blind Flange

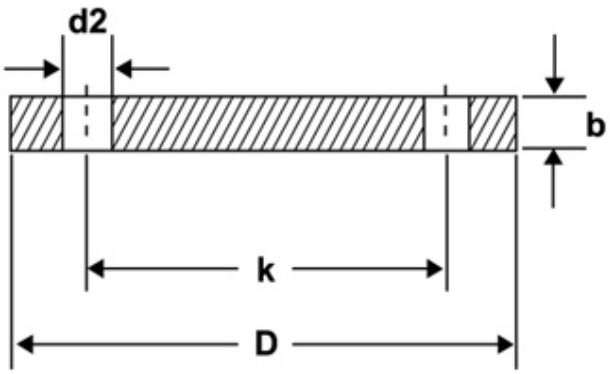

PN40							PN64				
DIN	No. of holes	D	b	k	d2	KG	D	b	k	d2	KG
10	4	90	16	60	14	0.72	100	20	70	14	1.04
15	4	95	16	65	14	0.81	105	20	75	14	2.98
20	4	105	18	75	14	1.14	130	22	90	18	2.19
25	4	115	18	85	14	1.38	140	24	100	18	2.65
32	4	140	18	100	18	2.03	155	24	110	22	3.26
40	4	150	18	110	18	2.35	170	26	125	22	4.18
50	4	165	20	125	18	3.2	180	26	135	22	4.67
65	8	185	22	145	18	4.29	205	26	160	22	5.94
80	8	200	24	160	18	5.54	215	28	170	22	7.18
100	8	235	24	190	22	7.6	250	30	200	26	10.10
125	8	270	26	220	26	10.82	295	34	240	30	16.10
150	8	300	28	250	26	14.6	345	36	280	33	23.50
175	12	350	32	295	30	22.04	375	40	310	33	30.80
200	12	375	34	320	30	27.21	415	42	345	36	39.70
250	12	450	38	385	33	44.38	470	46	400	36	56.70
300	16	515	42	450	33	64.17	530	52	460	36	57.40
350	16	580	46	510	36	89.52	600	56	525	39	114
400	16	660	50	585	39	126.76	670	60	585	42	152
500	20	755	56	670	42	184.63	-	-	-	-	-
600	20	890	62	795	48	285.17	-	-	-	-	-
700	24	995	64	900	48	368.83	-	-	-	-	-
800	24	1140	70	1030	56	528.39	-	-	-	-	-
900	28	1250	76	1140	56	690.99	-	-	-	-	-
1000	28	1360	84	1250	56	912.42	-	-	-	-	-

Dimensions in millimeter (mm).

DIN 2527 Blind Flange

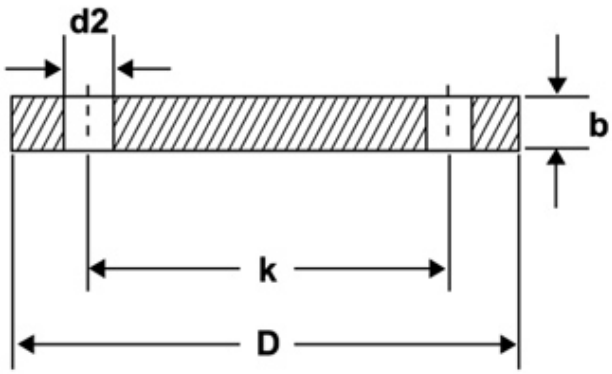

PN100						
DN	D	b	k	No. of holes	d2	KG
10	100	20	70	4	14	1.04
15	105	20	75	4	14	1.16
25	140	24	100	4	18	2.54
32	155	24	110	4	22	3.07
40	170	26	125	4	22	3.97
50	195	28	145	4	26	5.64
65	220	30	170	8	26	7.43
80	230	32	180	8	26	8.84
100	265	36	210	8	30	13.31
125	315	40	250	8	33	21.3
150	355	44	290	12	33	29.43
175	385	48	320	12	33	38.75
200	430	52	360	12	36	52.66
250	505	60	430	12	39	85.41
300	585	68	500	16	42	128.05
350	655	74	560	16	48	174.53

Dimensions in millimeter (mm).

DIN 2543 Flat Flange For Welding (Slip On) PN16

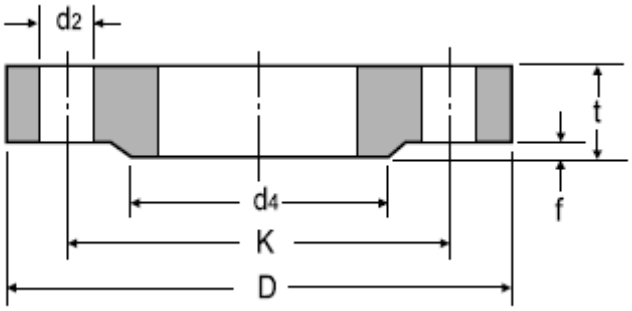

DN	Pipe OD		d4	D	t	f	K ϕ	No. of Holes	d2	KG
	ISO	DIN								
10	17.2	14	40	90	-	2	60	4	14	0.63
15	21.3	20	45	95	14	2	65	4	14	0.72
20	26.9	25	58	105	16	2	75	4	14	1.01
25	33.7	30	68	115	16	2	85	4	14	1.23
32	42.4	38	78	140	16	2	100	4	18	1.80
40	48.3	44.5	88	150	16	3	110	4	18	2.09
50	60.3	57	102	165	18	3	125	4	18	2.88
65	76.1	-	122	185	18	3	145	4	18	3.66
80	88.9	-	138	200	20	3	160	8	18	4.77
100	114.3	108	158	220	20	3	180	8	18	5.65
125	139.7	133	188	250	22	3	210	8	18	8.42
150	168.3	159	212	285	22	3	240	8	23	10.40
200	219.1	216	268	340	24	3	295	12	23	16.10
250	273	267	320	405	26	3	355	12	27	24.90
300	323.9	318	378	460	28	4	410	12	27	35.10
350	355.6	368	438	520	30	4	470	16	27	47.80
400	406.4	419	490	580	32	4	525	16	30	63.50
500	508	521	610	715	36	4	650	20	33	102.00
600	609.6	622	725	840	40	5	770	20	36	-
700	711.2	720	795	910	-	5	840	24	36	-
800	812.8	820	900	1025	-	5	950	24	39	-
900	914.4	920	1000	1125	-	5	1050	28	39	-
1000	1016	1020	1115	1255	-	5	1170	28	42	-

Dimensions in millimeter (mm).

DIN 2544 Flat Flange For Welding (Slip On) PN25

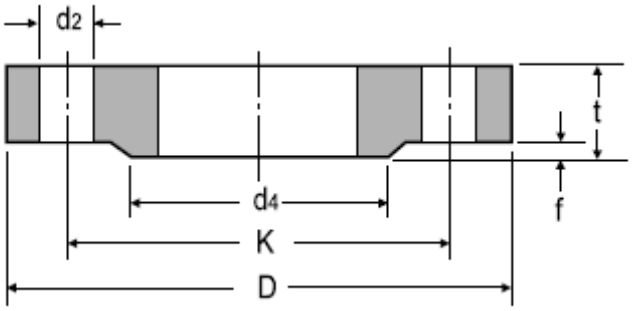

DN	Pipe OD		d4	D	t	f	Kϕ	No. of Holes	d2	KG
	ISO	DIN								
10	17.2	14	40	90	-	2	60	4	14	0.72
15	21.3	20	45	95	16	2	65	4	14	0.81
20	26.9	25	58	105	18	2	75	4	14	1.24
25	33.7	30	68	115	18	2	85	4	14	1.38
32	42.4	38	78	140	18	2	100	4	18	2.03
40	48.3	44.5	88	150	18	3	110	4	18	2.35
50	60.3	57	102	165	20	3	125	4	18	3.20
65	76.1	-	122	185	22	3	145	4	18	4.29
80	88.9	-	138	200	24	3	160	8	18	5.88
100	114.3	108	162	235	24	3	190	8	23	7.54
125	139.7	133	188	270	26	3	220	8	27	10.80
150	168.3	159	218	300	28	3	250	8	27	14.50
200	219.1	216	278	360	30	3	310	12	27	22.30
250	273	267	335	425	32	3	370	12	30	33.50
300	323.9	318	395	485	34	4	430	16	30	46.30
350	355.6	368	450	555	38	4	490	16	33	68.00
400	406.4	419	505	620	40	4	550	16	36	89.70
500	508	521	615	730	44	4	660	20	36	138.00
600	609.6	622	720	845	-	5	770	20	39	-
700	711.2	720	820	960	-	5	870	24	42	-
800	812.8	820	930	1085	-	5	990	24	48	-
900	914.4	920	1030	1185	-	5	1090	28	48	-
1000	1016	1020	1140	1320	-	5	1210	28	56	-

Dimensions in millimeter (mm).

DIN 2545 Flat Flange For Welding (Slip On) PN40

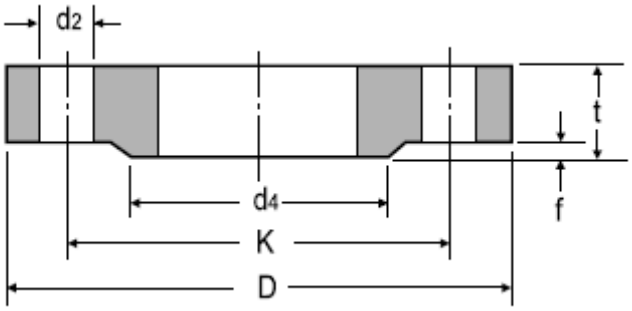

DN	Pipe OD		d4	D	t	f	K ϕ	No. of Holes	d2	KG
	ISO	DIN								
10	17.2	14	40	90	-	2	60	4	14	0.72
15	21.3	20	45	95	16	2	65	4	14	0.81
20	26.9	25	58	105	18	2	75	4	14	1.24
25	33.7	30	68	115	18	2	85	4	14	1.38
32	42.4	38	78	140	18	2	100	4	18	2.03
40	48.3	44.5	88	150	18	3	110	4	18	2.35
50	60.3	57	102	165	20	3	125	4	18	3.20
65	76.1	-	122	185	22	3	145	4	18	4.29
80	88.9	-	138	200	24	3	160	8	18	5.88
100	114.3	108	162	235	24	3	190	8	23	7.54
125	139.7	133	188	270	26	3	220	8	27	10.80
150	168.3	159	218	300	28	3	250	8	27	14.50
175	193.7	191	260	350	32	3	295	12	30	22.10
200	219.1	216	285	375	34	3	320	12	30	27.20
250	273	267	345	450	38	3	385	12	33	43.80
300	323.9	318	410	515	42	4	450	16	33	63.30
350	355.6	368	465	580	46	4	510	16	36	89.50
400	406.4	419	535	660	50	4	585	16	39	127.00
500	508	521	615	755	52	4	670	20	42	172.00

Dimensions in millimeter (mm).

DIN 2558 Oval Plain Threaded Flange PN6

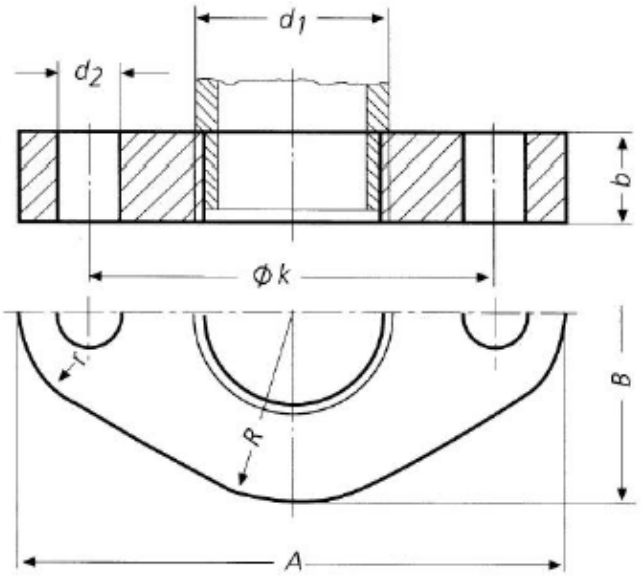

DN	d1	Thread DIN 2999	A	B	b	Øk	R	r	Thread	d2	KG
6	10.2	R 1/8	64	32	12	40	16	10	M10	11	0.119
8	13.5	R 1/4	72	36	12	45	18	11	M10	11	0.147
10	17.2	R 3/8	75	40	12	50	20	12	M10	11	0.165
15	21.3	R 1/2	80	45	12	55	22,5	13	M10	11	0.194
20	26.9	R 3/4	90	64	14	65	32	18	M10	11	0.373
25	33.7	R 1	100	72	14	75	36	20	M10	11	0.455
32	42.4	R 1-1/4	118	85	16	95	42.5	22	M12	14	0.675
40	48.3	R 1-1/2	132	95	16	100	47.5	25	M12	14	0.850
50	60.3	R 2	140	100	16	110	50	28	M12	14	0.882
65	76.1	R 2-1/2	160	118	16	130	59	32	M12	14	1.100
80	88.9	R 3	190	140	18	150	70	38	M16	18	1.760
100	114.3	R 4	210	160	18	170	80	42	M16	18	1.890

Dimensions in millimeter (mm).

DIN 2561 Oval Flange With Neck Threaded PN6 and PN10

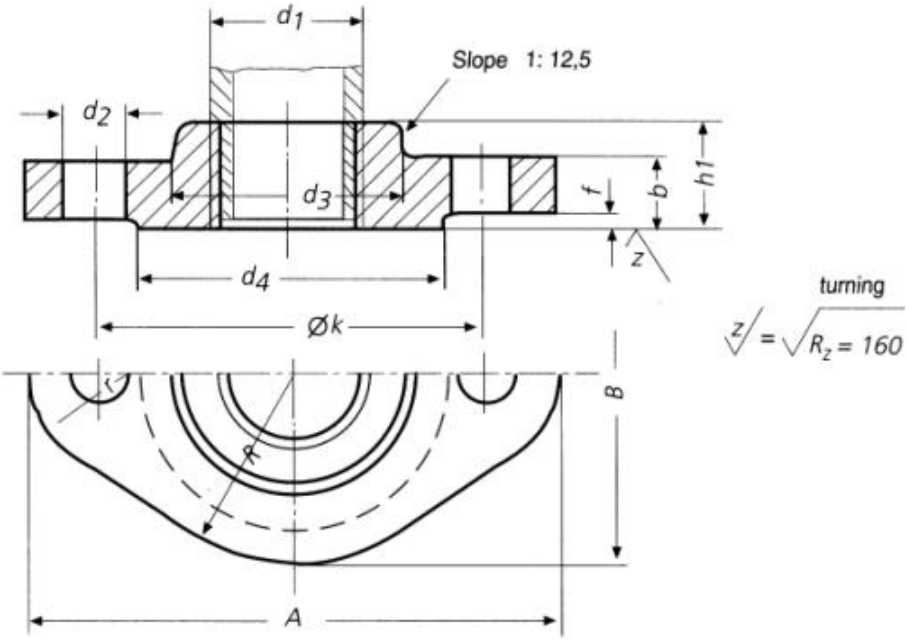

DN	d1	Thread DIN 2999	A	B	b	k	R	r	h1	d3	d4	f	Thread	d2	KG
6	10.2	R 1/8	75	40	12	50	20	12	18	20	32	2	M10	11	0.172
8	13.5	R 1/4	80	45	12	55	22,5	13	18	25	38	2	M10	11	0.21
10	17.2	R 3/8	90	50	14	60	25	15	20	30	40	2	M12	14	0.295
15	21.3	R 1/2	100	56	14	65	28	16	20	35	45	2	M12	14	0.365
20	26.9	R 3/4	105	75	16	75	37,5	21	24	45	58	2	M12	14	0.622
25	33.7	R 1	118	85	16	85	42,5	22	24	52	68	2	M12	14	0.777
32	42.4	R 1-1/4	140	100	16	100	50	28	26	60	78	2	M16	18	1.07
40	48.3	R 1-1/2	150	112	16	110	56	30	26	70	88	3	M16	18	1.26

Dimensions in millimeter (mm).

DIN 2565 Threaded Flange With Neck PN6

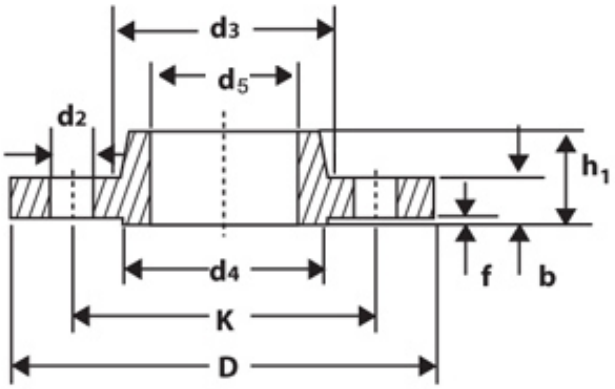

DN	D1	Thread DIN 2999	D	b	k	h	d3	d4	f	No. of holes	d2	KG
6	10.2	R1/8	65	10	40	18	18	25	2	4	11.5	0.19
8	13.5	R1/4	70	10	45	18	22	30	2	4	11.5	0.23
10	17.2	R3/8	75	12	50	20	25	35	2	4	11.5	0.32
15	21.3	R1/2	80	12	55	20	30	40	2	4	11.5	0.37
20	26.9	R3/4	90	14	65	24	40	50	2	4	11.5	0.58
25	33.7	R1	100	14	75	24	50	60	2	4	11.5	0.73
32	42.4	R1.1/4	120	14	90	26	60	70	2	4	14	1.05
40	48.3	R1.1/2	130	14	100	26	70	80	3	4	14	1.2
50	50.3	R2	140	14	110	28	80	90	3	4	14	1.54
65	76.1	R2.1/2	160	14	130	32	100	110	3	4	14	1.87
80	88.9	R3	190	16	150	34	110	128	3	4	18	2.78
100	114.3	R4	210	16	170	38	130	148	3	4	18	3.07
150	139.7	R5	240	18	200	40	160	178	3	8	18	4.33
200	168.3	R6	285	18	225	44	185	202	3	8	18	4.81

Dimensions in millimeter (mm).

DIN 2566 Threaded Flange With Neck PN16

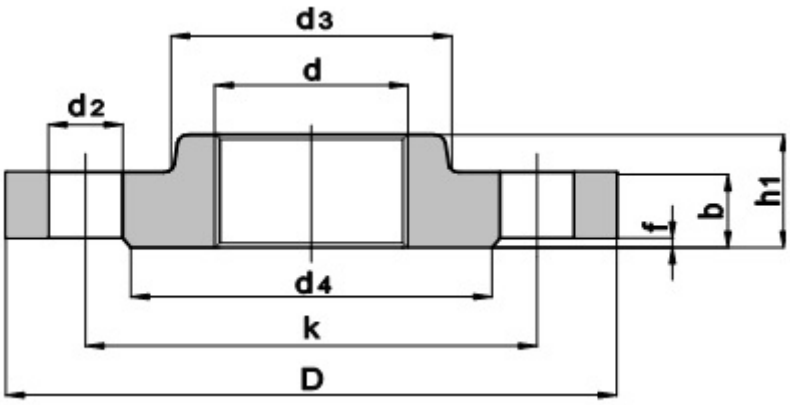

DN	d	Thread DIN 2999	D	b	k	h1	d3	d4	f	No. of holes	d2	KG
6	10.2	R1/8	75	12	50	18	20	32	2	4	11	0.33
8	13.5	R1/4	80	12	55	18	25	38	2	4	11	0.39
10	17.2	R3/8	90	14	60	20	30	40	2	4	14	0.56
15	21.3	R1/2	95	14	65	20	35	45	2	4	14	0.62
20	26.9	R3/4	105	16	75	24	45	58	2	4	14	0.92
25	33.7	R1	115	16	85	24	52	68	2	4	14	1.1
32	42.4	R1.1/4	140	16	100	26	60	78	2	4	18	1.59
40	48.3	R1.1/2	150	16	110	26	70	88	3	4	18	1.77
50	60.3	R2	165	18	125	28	85	102	3	4	18	2.41
65	76.1	R2.1/2	185	18	145	32	105	122	3	4	18	3.13
80	88.9	R3	200	20	160	34	118	138	3	4	18	3.95
100	114.3	R4	220	20	180	38	140	158	3	8	18	4.38
125	139.7	R3	250	22	210	40	168	188	3	8	18	5.99
150	168.3	R4	285	22	240	44	196	212	3	8	22	7.42

Dimensions in millimeter (mm).

DIN 2567 Threaded Flange With Neck PN25 and PN40

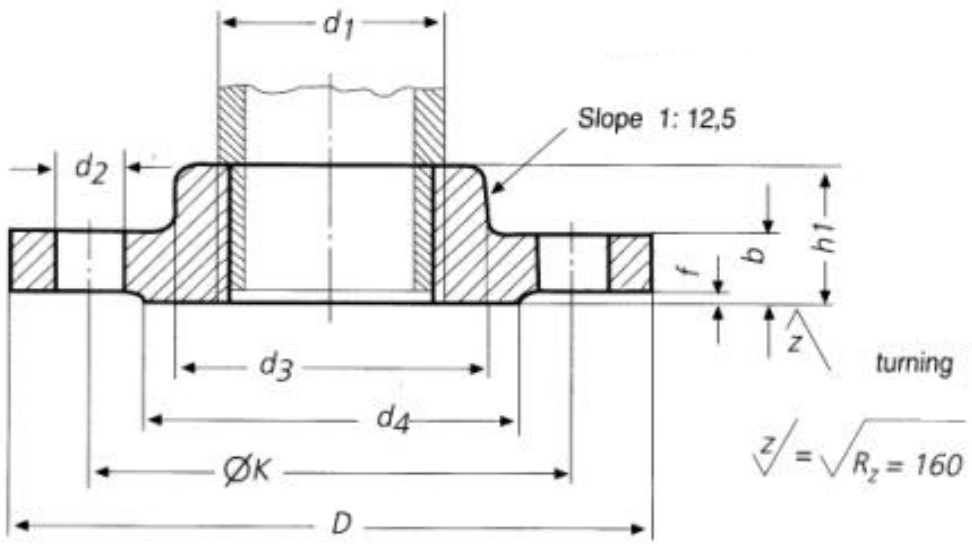

DN	d1	Thread DIN 2999	D	b	k	h1	d3	d4	f	No. of holes	Thread	d2	KG
6	10.2	R1/8	75	14	50	20	20	32	2	4	M10	11	0.388
8	13.5	R1/4	80	14	55	20	25	38	2	4	M10	11	0.450
10	17.2	R3/8	90	16	60	22	30	40	2	4	M12	14	0.630
15	21.3	R1/2	95	16	65	22	35	45	2	4	M12	14	0.710
20	26.9	R3/4	105	18	75	26	45	58	2	4	M12	14	1.030
25	33.7	R1	115	18	85	28	52	68	2	4	M12	14	1.280
32	42.4	R1.1/4	140	18	100	30	60	78	2	4	M16	18	1.870
40	48.3	R1.1/2	150	18	110	32	70	88	3	4	M16	18	2.140
50	60.3	R2	165	20	125	34	85	102	3	4	M16	18	2.850
65	76.1	R2.1/2	185	22	145	38	105	122	3	8	M16	18	3.850
80	88.9	R3	200	24	160	40	118	138	3	8	M16	18	4.800
100	114.3	R4	235	24	190	44	145	162	3	8	M20	22	6.430
125	139.7	R5	270	26	220	48	170	188	3	8	M24	26	8.770
150	165.1	R6	300	28	250	52	200	218	3	8	M24	26	10.500

Dimensions in millimeter (mm).

DIN 2568 Threaded Flange With Neck PN64

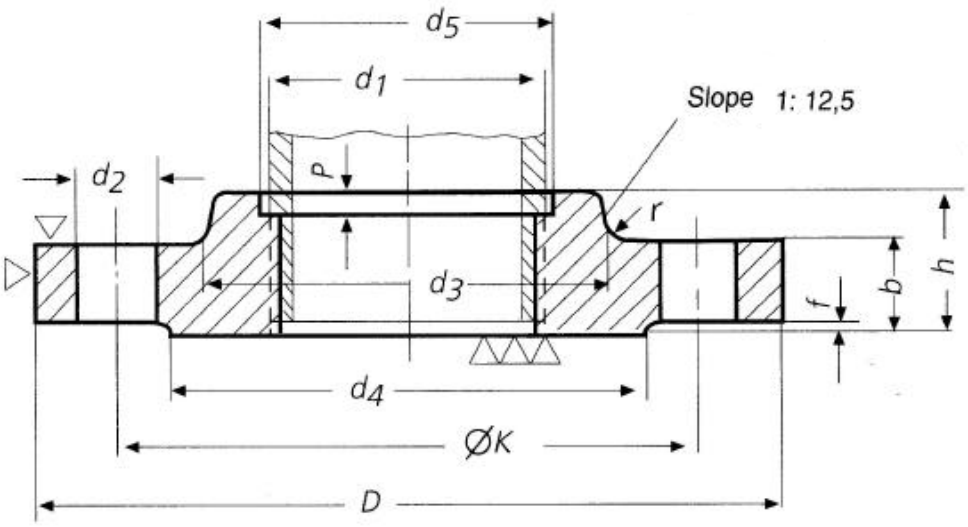

DN	d1	Thread DIN 2999	D	b	k	h1	d3	d5	P	r	d4	f	No. of holes	Thread	d2	KG
10 to 40	See DIN 2569															
50	60.3	R2	180	26	135	36	90	61	7	3	108	3	4	M20	22	4.29
65	76.1	R2.1/2	205	26	160	40	112	77	7	3	132	3	8	M20	22	5.48
80	88.9	R3	215	28	170	44	125	90	7	3	142	3	8	M20	22	6.42
100	114	R4	250	30	200	52	152	116	7	3	170	3	8	M24	26	9.25
125	140	R5	295	34	240	56	185	141	7	3	205	3	8	M27	30	14.4
150	165	R6	345	36	280	60	215	167	7	3	240	3	8	M30	33	20.7

Dimensions in millimeter (mm).

DIN 2569 Threaded Flange With Neck PN100

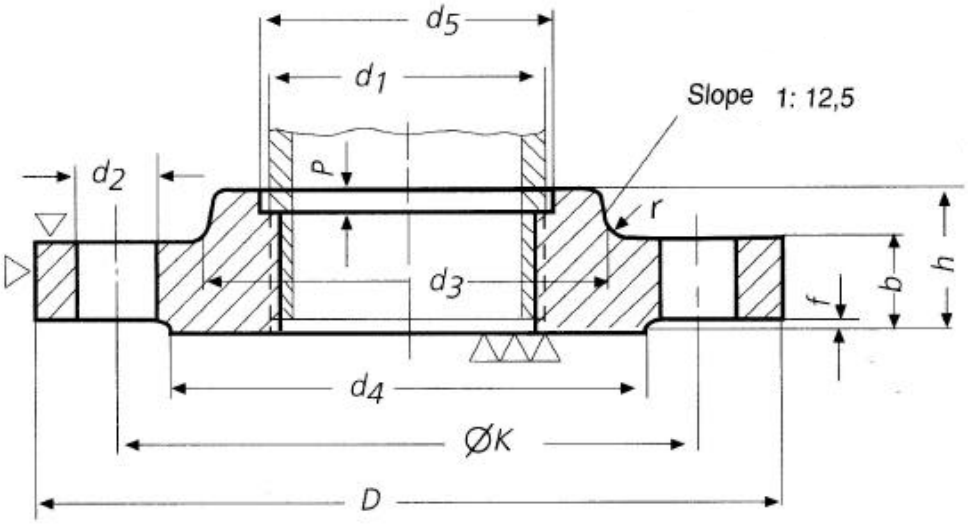

DN	d1	Thread DIN 2999	D	b	k	h1	d3	d5	P	r	d4	f	No. of holes	Thread	d2	KG
10	17.2	R3/8	100	20	70	28	40	18	4	2	50	2	4	M12	14	1.08
15	21.3	R1/2	105	20	75	28	43	22	6	2	55	2	4	M12	14	1.19
20	26.9	R3/4	130	22	90	30	52	28	7	2	68	2	4	M16	18	2.00
25	33.7	R1	140	24	100	32	60	35	7	3	78	2	4	M16	18	2.54
32	42.4	R1.1/4	155	24	110	32	68	43	7	3	85	2	4	M20	22	2.99
40	48.3	R1.1/2	170	26	125	34	80	49	7	3	98	3	4	M20	22	3.87
50	60.3	R2	195	28	145	36	95	61	7	3	115	3	4	M24	26	5.42
65	76.1	R2.1/2	220	30	170	40	118	77	7	3	140	3	8	M24	26	7.11
80	88.9	R3	230	32	180	44	130	90	7	3	150	3	8	M24	26	8.21
100	114	R4	265	36	210	52	158	116	7	3	175	3	8	M27	30	12.1
125	140	R5	315	40	250	56	188	141	7	3	210	3	8	M30	33	18.6
150	165	R6	355	44	290	60	225	167	7	3	250	3	12	M30	33	25.1

Dimensions in millimeter (mm).

DIN 2573 Flat Flange For Welding (Slip On) PN6

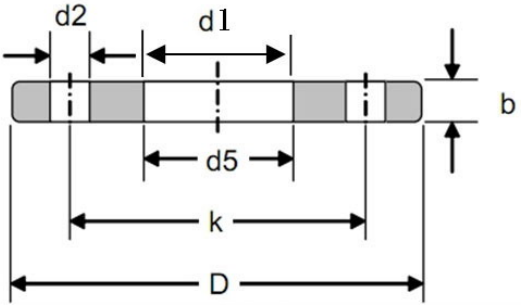

DN	Pipe OD		d5	D	b	k	No. of Holes	d2	KG
	ISO	DIN (d1)							
10	-	14	14.5	75	12	50	4	11	0.36
	17.2	-	17.7	75	12	50	4	11	0.36
15	-	20	21	80	12	55	4	11	0.41
	21.3	-	22	80	12	55	4	11	0.41
20	-	25	26	90	14	65	4	11	0.60
	26.9	-	27.6	90	14	65	4	11	0.59
25	-	30	31	100	14	75	4	11	0.74
	33.7	-	34.4	100	14	75	4	11	0.72
32	-	38	39	120	16	90	4	14	1.19
	42.4	-	43.1	120	16	90	4	14	1.16
40	-	44.5	45.5	130	16	100	4	14	1.39
	48.3	-	49	130	16	100	4	14	1.35
50	-	57	58.1	140	16	110	4	14	1.52
	60.3	-	61.1	140	16	110	4	14	1.49
65	76.1	-	77.1	160	16	130	4	14	1.86
80	88.9	-	90.3	190	18	150	4	14	2.96
100	-	108	109.6	210	18	170	4	18	3.42
	114.3	-	115.9	210	18	170	4	18	3.26
125	-	133	134.8	240	20	200	8	18	4.54
	139.7	-	141.6	240	20	200	8	18	4.31
150	-	159	161.1	265	20	225	8	18	5.34
	168.2	-	170.5	265	20	225	8	18	4.76
200	219.1	-	221.8	320	22	280	8	18	6.87
250	-	267	270.2	325	24	335	12	18	9.42
	273.0	-	276.2	325	24	335	12	18	8.94
300	323.9	-	327.6	440	24	395	12	22	11.91
350	355.6	-	359.7	480	26	445	12	22	16.52
	-	368	372.2	490	26	445	12	22	15.35
400	406.4	-	411	540	28	495	16	22	18.84
	-	419	423.7	540	28	495	16	22	18.01
450	457.0	-	462.3	595	30	550	16	22	24.52
500	508.0	-	513.6	645	30	600	20	22	26.37
600	610.0	-	616.5	755	32	705	20	26	34.80
700	711.0	-	*	860	40 / 36	810	24	26	*
800	813.0	-	*	975	44	920	24	30	*
900	914.0	-	*	1075	48	1020	24	30	*
1000	1016.0	-	*	1175	52	1120	28	30	*
1200	1219.0	-	*	1405	60	1340	32	33	*
1400	1422.0	-	*	1630	72	1560	36	36	*
1600	1626.0	-	*	1830	80	1760	40	36	*
1800	1829.0	-	*	2045	88	1970	44	39	*
2000	2032.0	-	*	2265	96	2180	48	42	*

Dimensions in millimeter (mm).

DIN 2576 Flat Flange For Welding (Slip On) PN10

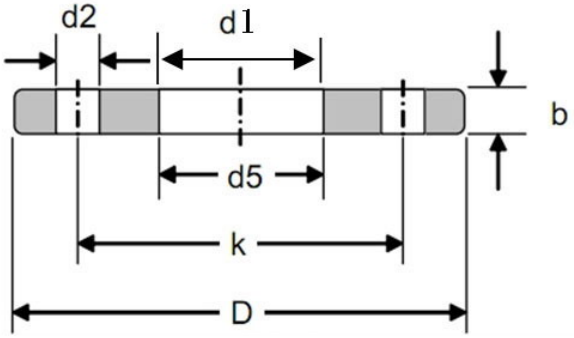

DN	Pipe OD		d5	D	b	k	No. of Holes	d2	KG
	ISO	DIN (d1)							
10	-	14	14.50	90	14	60	4	14	0.61
	17.2	-	17.70	90	14	60	4	14	0.60
15	-	20	21.00	95	14	65	4	14	0.67
	21.3	-	22.00	95	14	65	4	14	0.67
20	-	25	26.00	105	16	75	4	14	0.94
	26.9	-	27.60	105	16	75	4	14	0.94
25	-	30	31.00	115	16	85	4	14	1.13
	33.7	-	34.40	115	16	85	4	14	1.11
32	-	38	39.00	140	16	100	4	18	1.66
	42.4	-	43.10	140	16	100	4	18	1.62
40	-	44.5	45.50	150	16	110	4	18	1.89
	48.3	-	49.00	150	16	110	4	18	1.85
50	-	57	58.10	165	18	125	4	18	2.50
	60.3	-	61.10	165	18	125	4	18	2.46
65	76.1	-	77.10	185	18	145	4	18	2.99
80	88.9	-	90.30	200	20	160	8	18	3.61
100	-	108	109.60	220	20	180	8	18	4.17
	114.3	-	115.90	220	20	180	8	18	3.99
125	-	133	134.80	250	22	210	8	18	5.66
	139.7	-	141.60	250	22	210	8	18	5.41
150	-	159	161.10	285	22	240	8	22	6.97
	168.3	-	170.50	285	22	240	8	22	6.55
175	193.7	-	196.10	315	24	270	8	22	8.42
200	219.1	-	221.80	340	24	295	8	22	9.28
250	-	267	270.20	395	26	350	12	22	12.36
	273.0	-	276.20	395	26	350	12	22	11.85
300	323.9	-	327.60	445	26	400	12	22	13.61
350	355.6	-	359.70	505	28	460	16	22	20.35
	-	368	372.20	505	28	460	16	22	18.77
400	406.4	-	411.00	565	32	515	18	26	27.52
	-	419	423.70	565	32	515	18	26	35.43
450	457.0	-	462.30	615	38	565	20	26	35.11
500	508.0	-	513.60	670	38	620	20	26	40.20
600	610.0	-	615.50	780	42	725	20	26	51.87
700	711.0	-	*	895	50	840	24	30	*
800	813.0	-	*	1015	56	950	24	33	*
900	914.0	-	*	1115	62	1050	28	33	*
1000	1016.0	-	*	1230	70	1160	28	36	*
1200	1219.0	1220	*	1455	83	1380	32	39	*

Dimensions in millimeter (mm).
For DN10-DN40 use PN40; for DN50-DN200 use PN16.

DIN 2627 Welding Neck Flange PN400

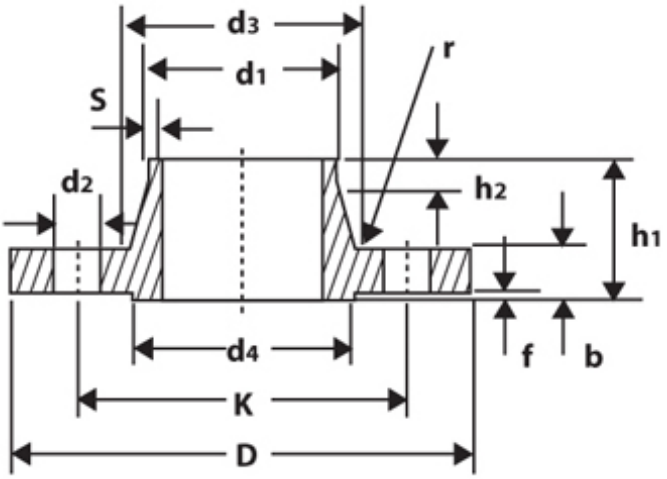

DN	d1 ISO	D	b	k	h1	d3	S	r	h2	d4	f	No. of holes	d2	KG
10	17.2	125	28	85	65	48	3.6	4	8	40	2	4	18	2.50
15	26.9	145	30	100	68	56	5.0	4	8	45	2	4	22	3.57
25	42.4	180	38	130	90	82	7.1	4	10	68	2	4	26	7.35
40	60.3	220	48	165	110	106	10.0	6	12	88	3	4	30	13.93
50	76.1	235	52	180	120	120	12.5	6	15	102	3	8	30	16.50
65	101.6	290	64	225	135	158	16.0	6	18	122	3	8	33	31.33
80	114.3	305	68	240	150	174	17.5	8	20	138	3	8	33	37.99
100	139.7	370	80	295	175	215	22.2	8	25	162	3	8	39	66.77
125	193.7	415	92	340	200	258	30.0	8	30	188	3	12	39	94.73
150	219.1	475	105	390	225	302	35.0	10	35	218	3	12	42	269.50
200	273.0	585	130	490	280	388	40.0	10	40	285	3	16	48	200.00

Dimensions in millimeter (mm).

DIN 2628 Welding Neck Flange PN250

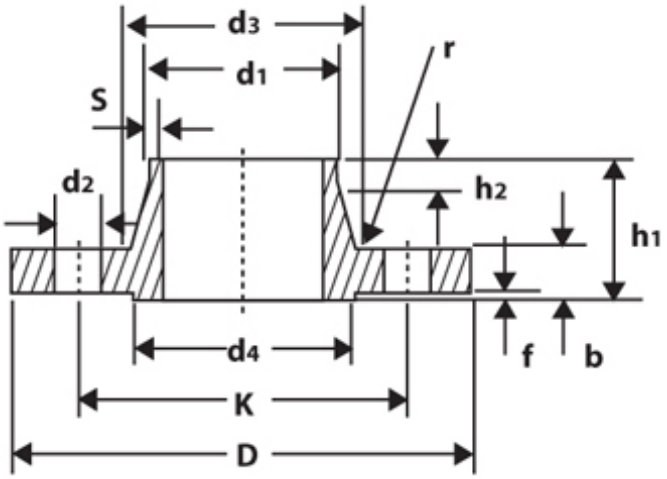

DN	d1		D	b	k	h1	d3	S	r	h2	d4	f	No. of holes	d2	KG
	ISO	DIN													
10	-	14	125	24	85	58	44	2.6	4	6	40	2	4	18	2.10
	17.2	-	125	24	85	58	44	2.6	4	6	40	2	4	18	2.09
15	-	20	130	26	90	60	48	2.6	4	6	45	2	4	18	2.48
	21.3	-	130	26	90	60	48	2.6	4	6	45	2	4	18	2.47
25	-	30	150	28	105	65	60	3.6	4	8	68	2	4	22	3.56
	33.7	-	150	28	105	65	60	3.6	4	8	68	2	4	22	3.53
40	-	44.5	185	34	135	80	84	5.0	6	10	88	3	4	26	6.65
	48.3	-	185	34	135	80	84	5.0	6	10	88	3	4	26	6.58
50	-	57	200	38	150	85	95	6.3	6	10	102	3	8	26	8.17
	60.3	-	200	38	150	85	95	6.3	6	10	102	3	8	26	8.09
65	76.1	-	230	42	180	95	124	8.0	6	12	122	3	8	26	12.59
80	101.6	-	255	46	200	102	136	11.0	8	12	138	3	8	30	16.32
100	127.0	-	300	54	235	120	164	14.2	8	14	162	3	8	33	27.07
125	152.4	-	340	60	275	140	200	16.0	8	16	188	3	12	33	38.79
150	177.8	-	390	68	320	160	240	17.5	10	18	218	3	12	36	59.05
200	244.5	-	485	82	400	190	305	25.0	10	25	285	3	12	42	109.45
250	298.5	-	585	100	490	215	385	32.0	12	30	345	3	16	48	189.94

Dimensions in millimeter (mm).

DIN 2629 Welding Neck Flange PN320

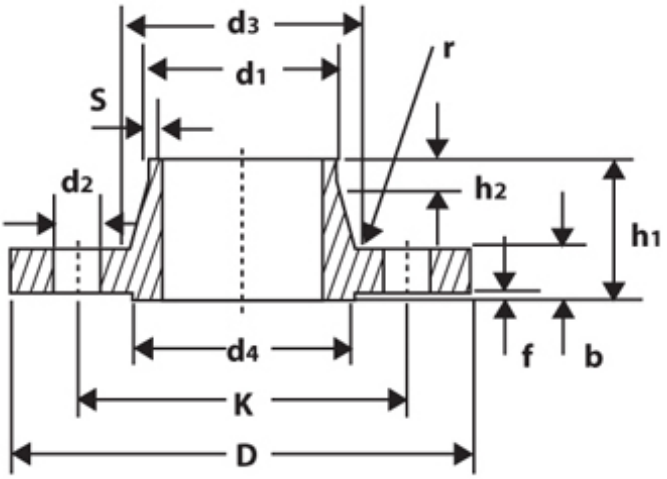

DN	d1		D	b	k	h1	d3	S	r	h2	d4	f	No. of holes	d2	KG
	ISO	DIN													
10.0	-	14	125	24	85	58	44	2.6	4	6	40	2	4	18	2.10
	17.2	-	125	24	85	58	44	2.6	4.0	6	40	2	4	18	2.09
15.0	-	20	130	26	90	60	48	3.2	4	6	45	2	4	18	2.49
	21.3	-	130	26	90	60	48	3.2	4.0	6	45	2	4	18	2.49
25.0	-	30	160	34	115	78	68	5.0	4	8	68	2	4	22	5.14
	33.7	-	160	34	115	78	68	5	4.0	8	68	2	4	22	5.11
40.0	-	44.5	195	38	145	88	92	6.3	6	10	88	3	4	26	8.53
	45.3	-	195	38	145	88	92	6.3	6.0	10	88	3	4	26	8.47
50.0	63.5	-	210	42	160	100	106	8.0	6	10	102	3	8	26	10.52
65.0	88.9	-	255	51	200	120	138	11.0	6	12	122	3	8	30	19.26
80.0	101.6	-	275	55	220	130	156	12.5	8	14	138	3	8	30	24.81
100.0	-	133	335	65	265	145	186	16.0	8	16	162	3	8	36	42.18
125.0	-	159	380	75	310	175	230	20.0	8	20	188	3	12	36	64.55
	168.3	-	380	75	310	175	230	20	8.0	20	188	3	12	36	63.30
150.0	193.7	-	425	84	350	195	265	25.0	10	25	218	3	12	36	91.04
175.0	219.1	-	485	95	400	215	308	28.0	10	28	260	3	12	42	135.46
200.0	244.5	-	525	103	440	235	345	30.0	10	30	285	3	16	42	170.94
250.0	323.9	-	640	125	540	300	428	40.0	12	40	345	3	16	52	311.99

Dimensions in millimeter (mm).

DIN 2630 Welding Neck Flange PN2.5

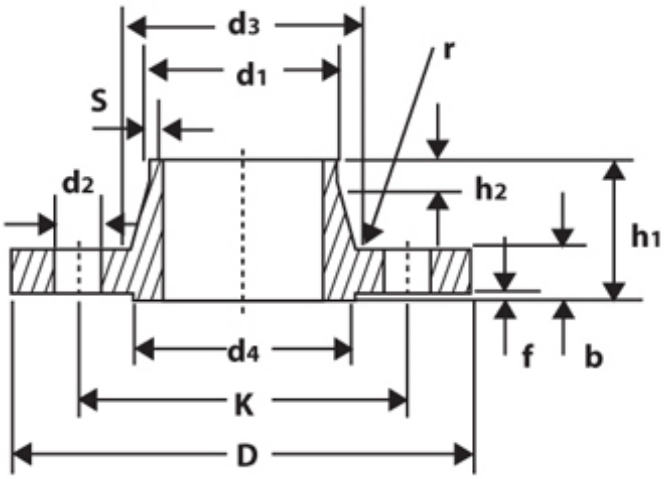

DN	d1		D	b	k	h1	D3	S	r	h2	d4	f	No. of Holes	d2	KG
	ISO	DIN													
10	-	14	75	12	50	28	22	1.8	4	6	35	2	4	11	0.34
	17.2	-	75	12	50	28	26	1.8	4	6	35	2	4	11	0.34
15	-	20	80	12	55	30	28	2	4	6	40	2	4	11	0.39
	21.3	-	80	12	55	30	30	2	4	6	40	2	4	11	0.46
20	-	25	90	14	65	32	35	2.3	4	6	50	2	4	11	0.6
	26.9	-	90	14	65	32	38	2.3	4	6	50	2	4	11	0.6
25	-	30	100	14	75	35	40	2.6	4	6	60	2	4	11	0.78
	33.7	-	100	14	75	35	42	2.6	4	6	60	2	4	11	0.78
32	-	38	120	14	90	35	50	2.6	6	6	70	2	4	14	1.07
	42.4	-	120	14	90	35	55	2.6	6	6	70	2	4	14	1.06
40	-	44.5	130	14	100	38	55	2.6	6	7	80	3	4	14	1.21
	48.3	-	130	14	100	38	62	2.6	6	7	80	3	4	14	1.2
50	-	57	140	14	110	38	70	2.9	6	8	90	3	4	14	1.37
	60.3	-	140	14	110	38	74	2.9	6	8	90	3	4	14	1.36
65	76.1	-	160	14	130	38	88	2.9	6	9	110	3	4	14	1.6
80	88.9	-	190	16	150	42	102	3.2	8	10	128	3	4	18	2.72
100	-	106	210	16	170	45	122	3.6	8	10	148	3	4	18	3.2
	114.3	-	210	16	170	45	130	3.6	8	10	148	3	4	18	3.22
125	-	133	240	18	200	48	148	4	8	10	178	3	8	18	4.58
	139.7	-	240	18	200	48	155	4	8	10	178	3	8	18	4.42
150	-	159	265	18	225	48	172	4.5	10	12	202	3	8	18	5.26
	166.3	-	265	18	225	48	184	4.5	10	12	202	3	8	18	5.04
200	219.1	-	320	20	280	55	236	5.9	10	15	258	3	8	18	7.95
250	-	267	375	22	335	60	282	6.3	12	15	312	3	12	18	11.16
	273	-	375	22	335	60	290	6.3	12	16	312	3	12	18	10.57
300	323.9	-	440	22	395	62	342	7.1	12	15	365	4	12	22	14.26
350	355.6	-	490	22	445	62	385	7.1	12	15	415	4	12	22	18.56
	-	368	490	22	445	62	385	7.1	12	15	415	4	12	22	16.76
400	406.4	-	540	22	495	65	438	7.1	12	15	465	4	16	22	21.25
	-	419	540	22	495	65	438	7.1	12	15	465	4	16	22	19.1

Dimensions in millimeter (mm).

DIN 2630 Welding Neck Flange PN2.5

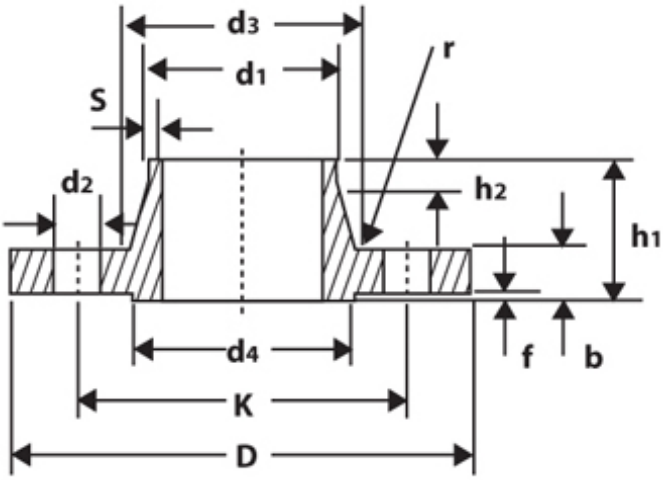

DN	d1		D	b	k	h1	D3	S	r	h2	d4	f	No. of Holes	d2	KG
	ISO	DIN													
500	506	-	645	24	600	68	538	7.1	12	15	570	4	20	22	23.57
600	610	-	755	24	705	70	640	7.1	12	16	670	5	20	26	34.5
700	711	-	660	24	810	70	740	7.1	12	16	775	5	24	26	40
800	813	-	975	24	920	70	842	7.1	12	16	880	5	24	30	48.18
900	914	-	1075	26	1020	70	942	7.1	12	16	980	5	24	30	58.1
1000	1016	-	1175	26	1120	70	1045	7.1	16	16	1080	5	25	30	63.41
1200	1220	-	1375	26	1320	70	1245	7	16	16	1280	5	32	30	72.82
1400	1420	-	1575	26	1520	70	1445	7	16	16	1480	5	36	30	84.5
1600	1620	-	1790	26	1730	80	1645	8	16	20	1680	5	40	30	111.57
1800	1820	-	1990	26	1930	80	1845	9	16	20	1890	5	44	30	128.41
2000	2020	-	2190	26	2130	80	2045	10	18	22	2090	5	48	30	145
2200	2220	-	2405	28	2340	90	2248	10	18	25	2295	6	52	33	184.1
2400	2420	-	2605	28	2540	90	2448	10	18	25	2495	6	56	32	200.47
2600	2620	-	2805	28	2740	90	2648	10	18	25	2695	6	60	33	216
2800	2820	-	3030	30	2960	90	2848	10	18	25	2910	6	64	36	268.05
3000	3020	-	3230	30	3160	90	3050	10	18	25	3110	6	66	36	285
3200	3220	-	3430	30	3350	90	3250	10	20	25	3310	6	72	36	306.75
3400	3420	-	3630	32	3560	95	3450	10	20	28	3510	6	76	36	346.71
3600	3620	-	3340	32	3770	100	3652	10	20	28	3720	6	80	36	305.71
3800	3820	-	4045	34	3970	100	3852	10	20	28	3920	6	80	-	-
4000	4020	-	4245	34	4170	100	4052	10	20	28	4120	6	84	-	-

DIN 2631 Welding Neck Flange PN6

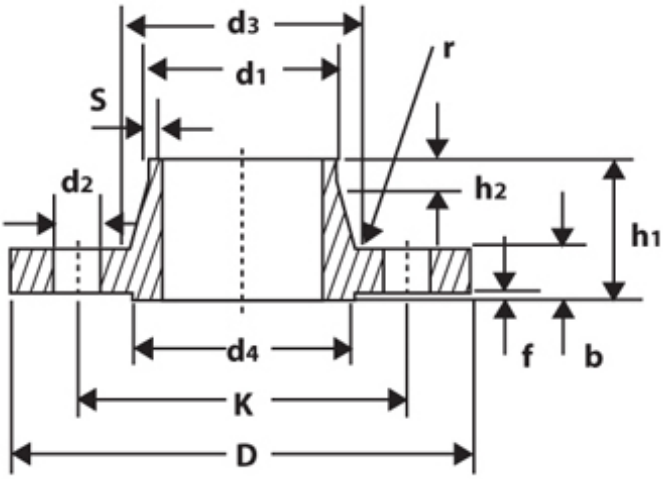

DN	d1		D	b	k	h1	d3	S	r	h2	d4	f	No. of holes	d2	KG
	ISO	DIN													
10	-	14	75	12	50	28	22	1.8	4	6	35	2	4	11	0.34
	17.2	-	75	12	50	28	26	1.8	4	6	35	2	4	11	0.34
15	-	20	80	12	55	30	28	2	4	6	40	2	4	11	0.39
	21.3	-	80	12	55	30	30	2	4	6	40	2	4	11	0.4
20	-	25	90	14	65	32	35	2.3	4	6	50	2	4	11	0.6
	26.9	-	90	14	65	32	38	2.3	4	6	50	2	4	11	0.6
25	-	30	100	14	75	35	40	2.6	4	6	60	2	4	11	0.76
	33.7	-	100	14	75	35	42	2.6	4	6	60	2	4	11	0.75
32	-	38	120	14	90	35	50	2.6	6	6	70	2	4	14	1.07
	42.4	-	120	14	90	35	55	2.6	6	6	70	2	4	14	1.06
40	-	44.5	130	14	100	38	58	2.6	6	7	80	3	4	14	1.21
	46.3	-	130	14	100	38	62	2.6	6	7	80	3	4	14	1.2
50	-	57	140	14	110	38	70	2.9	6	8	90	3	4	14	1.37
	60.3	-	140	14	110	38	74	2.9	6	8	90	3	4	14	1.36
65	76.1	-	160	14	130	38	88	2.9	6	9	110	3	4	14	1.69
80	88.9	-	190	16	150	42	102	3.2	8	10	128	3	4	18	2.72
100	-	108	210	16	170	45	122	3.6	8	10	148	3	4	18	3.29
	114.3	-	210	16	170	45	130	3.6	8	10	148	3	4	18	3.22
125	-	133	240	18	200	48	148	4	8	10	178	3	8	18	4.58
	139.7	-	240	18	200	48	155	4	8	10	178	3	8	18	4.42
150	-	159	265	18	225	48	172	4.5	10	12	202	3	8	18	5.26
	158.3	-	265	18	225	48	184	4.5	10	12	202	3	8	18	5.04
200	219.1	-	320	20	280	55	236	5.9	10	15	258	3	8	18	7.95
250	-	267	375	22	335	60	282	6.3	12	15	312	3	12	18	11.16
	273	-	375	22	335	60	290	6.3	12	15	312	3	12	18	10.87
300	323.9	-	440	22	395	62	342	7.1	12	15	365	4	12	22	14.26
350	355.6	-	490	22	445	62	385	7.1	12	15	415	4	12	22	18.54
	-	368	490	22	445	62	385	7.1	12	15	415	4	12	22	16.78
400	406.6	-	540	22	495	65	438	7.1	12	15	465	4	16	22	21.25
	-	419	540	22	495	65	438	7.1	12	15	465	4	16	22	19.1

Dimensions in millimeter (mm).

DIN 2631 Welding Neck Flange PN6

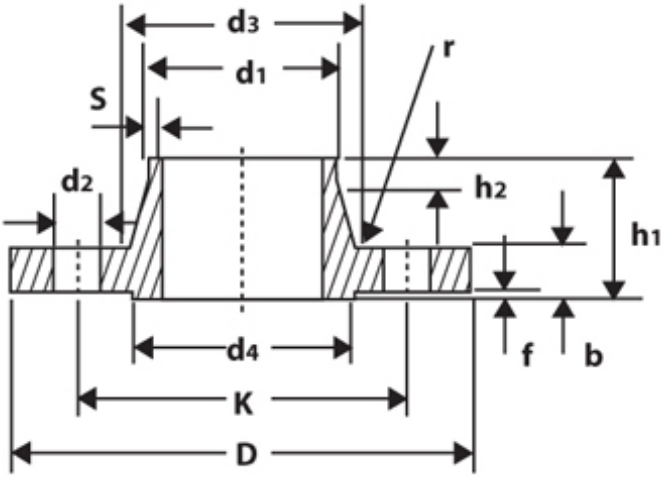

DN	d1		D	b	k	h1	d3	S	r	h2	d4	f	No. of holes	d2	KG
	ISO	DIN													
500	508	-	645	24	600	68	538	7.1	12	15	570	4	20	22	28.67
600	610	-	755	24	705	70	640	7.1	12	16	670	5	20	26	34.8
700	711	-	860	24	810	70	740	7.1	12	16	775	5	24	26	40.94
800	813	-	975	24	920	70	842	7.1	12	16	880	5	24	30	49.19
900	914	-	1075	26	1020	70	942	7.1	12	16	980	5	24	30	58.1
1000	1016	-	1175	26	1120	70	1045	7.1	16	16	1080	5	28	30	63.48
1200	1220	-	1405	28	1340	90	1248	8	16	20	1295	5	32	33	100.17
1400	1420	-	1630	32	1560	90	1452	8	16	20	1510	5	36	36	142.78
1600	1620	-	1830	34	1760	90	1655	9	16	20	1710	5	40	36	174.36
1800	1820	-	2045	36	1970	100	1855	10	16	20	1920	5	44	39	226.98
2000	2020	-	2265	38	2180	110	2058	11	16	25	2125	5	48	42	292.12
2200	2220	-	2475	42	2390	115	2260	12	18	25	2335	6	52	42	366.33
2400	2420	-	2685	44	2600	125	2462	13	18	25	2545	6	56	42	448.52
2600	2620	-	2905	46	2810	130	2665	14	18	25	2750	6	60	48	540.16
2800	2820	-	3115	48	3020	135	2865	15	18	30	2960	6	64	48	630.03
3000	3020	-	3315	50	3220	140	3068	16	18	30	3160	6	68	48	716.33
3200	3220	-	3525	54	3430	150	3272	16	20	30	3370	6	72	48	854.42
3400	3420	-	3735	46	3640	160	3475	18	20	35	3580	6	76	48	887.81
3600	3620	-	3970	60	3860	165	3678	18	20	35	3790	6	80	56	1202.43

Dimensions in millimeter (mm).

DIN 2632 Welding Neck Flange PN10

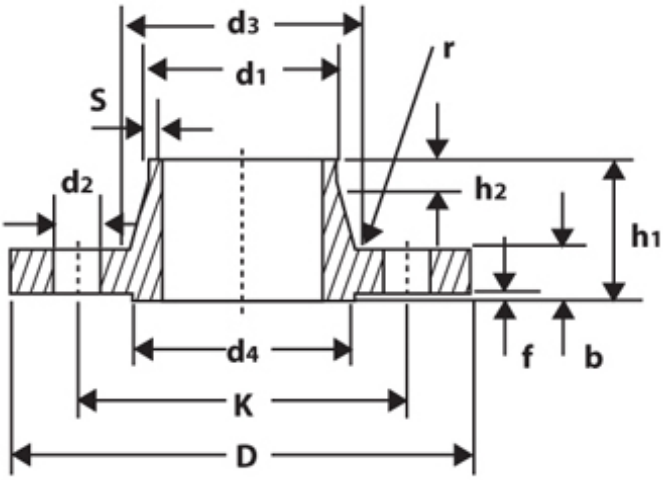

DN	d1		D	b	k	h1	d3	S	r	h2	d4	f	No. of holes	d2	KG
	ISO	DIN													
10	-	14	90	14	60	35	25	1.8	4	6	40	2	4	14	0.58
	17.2	-	90	14	60	35	28	1.8	4	6	40	2	4	14	0.58
15	-	20	95	14	65	35	30	2	4	6	45	2	4	14	0.65
	21.3	-	95	14	65	35	32	2	4	6	45	2	4	14	0.65
20	-	25	105	16	75	38	38	2.3	4	6	58	2	4	14	0.95
	26.9	-	105	16	75	38	40	2.3	4	6	58	2	4	14	0.95
25	-	30	115	16	85	38	42	2.6	4	6	68	2	4	14	1.15
	33.7	-	115	16	85	38	45	2.6	4	6	68	2	4	14	1.14
32	-	38	140	16	100	40	52	2.6	6	6	78	2	4	18	1.67
	42.4	-	140	16	100	40	55	2.6	6	6	78	2	4	18	1.65
40	-	44.5	150	16	110	42	60	2.6	6	7	88	3	4	18	1.85
	48.3	-	150	16	110	42	64	2.6	6	7	88	3	4	18	1.83
50	-	57	165	18	125	45	72	2.9	6	8	102	3	4	18	2.51
	60.3	-	165	18	125	45	75	2.9	6	8	102	3	4	18	2.48
65	76.1	-	165	18	145	45	90	2.9	6	10	122	3	4	18	3.03
80	88.9	-	200	20	160	50	105	3.2	6	10	138	3	8	18	3.82
100	-	108	220	20	180	52	125	3.6	8	12	158	3	8	18	4.54
	114.3	-	220	20	180	52	131	3.6	8	12	158	3	8	18	4.41
125	-	133	250	22	210	55	150	4	8	12	188	3	8	18	6.28
	139.7	-	250	22	210	55	156	4	8	12	188	3	8	18	6.07
150	-	159	285	22	240	55	175	4.5	10	12	212	3	8	22	7.75
	168.3	-	285	22	240	55	184	4.5	10	12	212	3	8	22	7.40
200	219.1	-	340	24	295	62	235	5.9	10	16	268	3	8	23	11.10
250	-	267	395	26	350	68	285	6.3	12	16	320	3	12	23	15.31
	273	-	395	26	350	68	292	6.3	12	16	320	3	12	23	14.92
300	323.9	-	445	26	400	68	344	7.1	12	16	370	4	12	23	17.47
350	355.6	-	505	26	460	66	385	7.1	12	16	430	4	16	23	23.7
	-	368	505	26	460	68	385	7.1	12	16	430	4	16	23	21.71
400	406.4	-	565	26	515	72	440	7.1	12	16	482	4	16	27	28.72
	-	419	565	26	515	72	440	7.1	12	16	482	4	16	27	26.27

Dimensions in millimeter (mm).

DIN 2632 Welding Neck Flange PN10

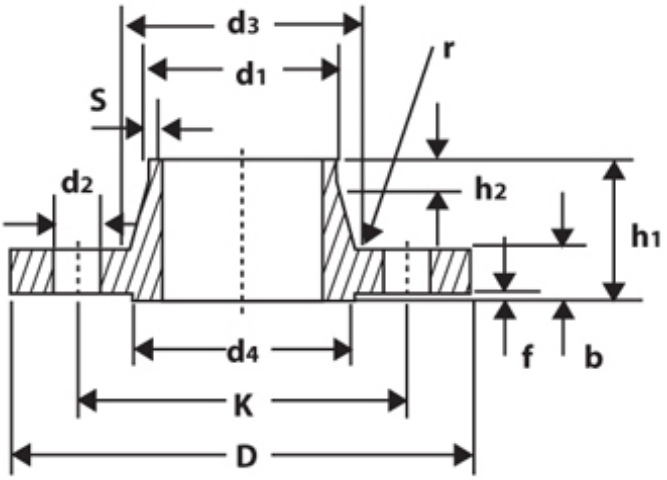

DN	d1		D	b	k	h1	d3	S	r	h2	d4	f	No. of holes	d2	KG
	ISO	DIN													
450	457.2	-	615	26	565	72	478	7.1	12	16	532	4	20	27	30.40
500	508	-	670	28	620	75	542	7.1	12	16	585	4	20	27	38.27
	-	521	670	28	620	75	542	7.1	12	16	585	4	20	27	38.27
600	610	-	780	28	725	80	642	7.1	12	18	685	5	20	30	46.56
700	711.2	-	895	30	840	80	745	8	12	18	800	5	24	30	62.30
	-	720	895	30	840	80	745	8	12	18	800	5	24	30	62.30
800	812.8	-	1015	32	950	90	850	8	12	18	905	5	24	33	83.81
	-	820	1015	32	950	90	850	8	12	18	905	5	24	33	83.81
900	914	-	1115	34	1050	95	950	10	12	20	1005	5	28	33	102.45
	-	920	1115	34	1050	95	950	10	12	20	1005	5	28	33	102.45
1000	1016	-	1230	34	1160	95	1052	10	16	20	1110	5	28	36	118.53
1200	1220	-	1455	36	1380	115	1255	11	16	25	1330	5	32	39	178.18
1400	1420	-	1675	42	1590	120	1460	12	16	25	1535	5	36	42	244.75
1600	1620	-	1915	46	1820	130	1665	14	16	25	1760	5	40	48	353.74
1800	1820	-	2115	50	2020	140	1868	15	16	30	1960	5	44	48	436.33
2000	2020	-	2325	54	2230	150	2072	16	16	30	2170	5	46	48	548.04
2200	2220	-	2550	58	2440	160	2275	18	18	35	2370	5	52	56	685.10
2400	2420	-	2760	62	2650	170	2478	20	18	35	2570	5	56	56	640.04
2600	2620	-	2860	66	2850	180	2690	22	18	40	2780	6	60	56	990.16
2800	2820	-	3180	70	3070	190	2882	22	18	40	3000	6	64	56	1187.16
3000	3020	-	3405	75	3290	200	3085	24	18	45	3210	6	65	62	1437.06

Dimensions in millimeter (mm).

DIN 2633 Welding Neck Flange PN16

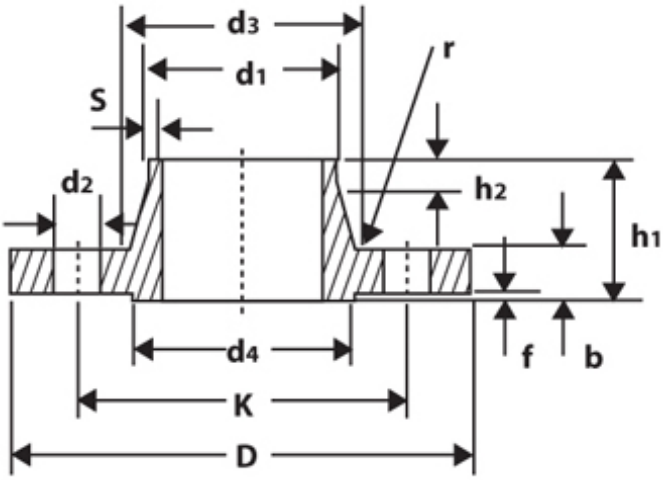

DN	d1		D	b	k	h1	d3	S	r	h2	d4	f	No. of holes	d2	KG
	ISO	DIN													
10	-	14	90	14	60	35	25	1.8	4	6	40	2	4	14	0.58
	17.2	-	90	14	60	35	28	1.8	4	6	40	2	4	14	0.58
15	-	20	95	14	65	35	30	2	4	6	45	2	4	14	0.65
	21.3	-	95	14	65	35	32	2	4	6	45	2	4	14	0.65
20	-	25	105	16	75	38	38	2.3	4	6	58	2	4	14	0.95
	26.9	-	105	16	75	38	40	2.3	4	6	58	2	4	14	0.95
25	-	30	115	16	85	38	42	2.6	4	6	68	2	4	14	1.15
	33.7	-	115	16	85	38	45	2.6	4	6	68	2	4	14	1.14
32	-	38	140	16	100	40	52	2.6	6	6	78	2	4	18	1.67
	42.4	-	140	16	100	40	56	2.6	6	6	78	2	4	18	1.65
40	-	44.5	150	16	110	42	60	2.6	6	7	88	3	4	18	1.85
	48.3	-	150	16	110	42	64	2.6	6	7	88	3	4	18	1.83
50	-	57	165	18	125	45	72	2.9	6	8	102	3	4	18	2.51
	60.3	-	165	18	125	45	75	2.9	6	8	102	3	4	18	2.48
65	76.1	-	185	18	145	45	90	2.9	6	10	122	3	4	18	3.03
80	88.9	-	200	20	160	50	105	3.2	8	10	138	3	8	18	3.82
100	-	108	220	20	180	52	125	3.6	8	12	158	3	8	18	4.54
	114.3	-	220	20	180	52	131	3.6	8	12	158	3	8	18	4.41
125	-	133	250	22	210	55	150	4	8	12	188	3	8	18	6.28
	139.7	-	250	22	210	55	156	4	8	12	188	3	8	18	6.07
150	-	159	285	22	240	55	175	4.5	10	12	212	3	8	23	7.75
	168.3	-	285	22	240	55	184	4.5	10	12	212	3	8	23	7.4
175	193.7	-	315	24	270	60	210	5.4	10	12	242	3	8	23	9.86
200	219.1	-	340	24	295	62	235	5.9	10	16	268	3	12	23	10.85

Dimensions in millimeter (mm).

DIN 2633 Welding Neck Flange PN16

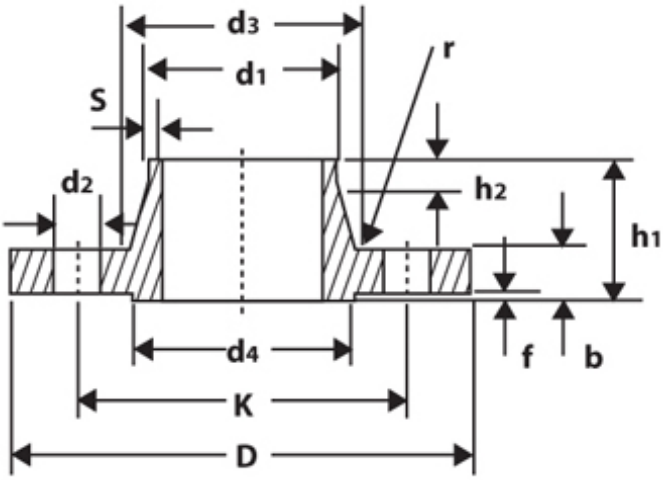

DN	d1		D	b	k	h1	d3	S	r	h2	d4	f	No. of holes	d2	KG
	ISO	DIN													
250	-	267	405	26	355	70	285	6.3	12	16	320	3	12	26	16.26
	273	-	405	26	355	70	292	6.3	12	16	320	3	12	26	15.87
300	323.9	-	460	28	410	78	344	7.1	12	16	378	4	12	26	21.24
350	355.6	-	520	30	470	82	390	8	12	16	438	4	16	26	31.38
	-	368	520	30	470	82	390	8	12	16	438	4	16	26	28.95
400	406.4	-	580	32	525	85	445	8	12	16	490	4	16	30	39.3
	-	419	580	32	525	85	445	8	12	16	490	4	16	30	36.3
500	508	-	715	34	650	90	548	8	12	16	610	4	20	33	59.63
600	610	-	840	36	770	95	652	8.8	12	18	725	5	20	36	82.54
700	711	-	910	36	840	100	755	8.8	12	18	795	5	24	36	83.9
800	813	-	1025	38	950	105	855	10	12	20	900	5	24	39	107.3
900	914	-	1125	40	1050	110	955	10	12	20	1000	5	28	39	124.97
1000	1016	-	1255	42	1170	120	1058	10	16	22	1115	5	28	42	163.76
1200	1220	-	1485	48	1390	130	1262	12.5	16	30	1330	5	32	48	244.15
1400	1420	-	1685	52	1590	145	1465	14.2	16	30	1530	5	36	48	320.87
1600	1620	-	1930	58	1820	160	1668	16	16	35	1750	5	40	56	465.83
1800	1820	-	2130	62	2020	170	1870	17.5	16	35	1950	5	44	56	570.52
2000	2020	-	2345	66	2230	180	2072	20	16	40	2150	5	48	62	706.74

Dimensions in millimeter (mm).

DIN 2634 Welding Neck Flange PN25

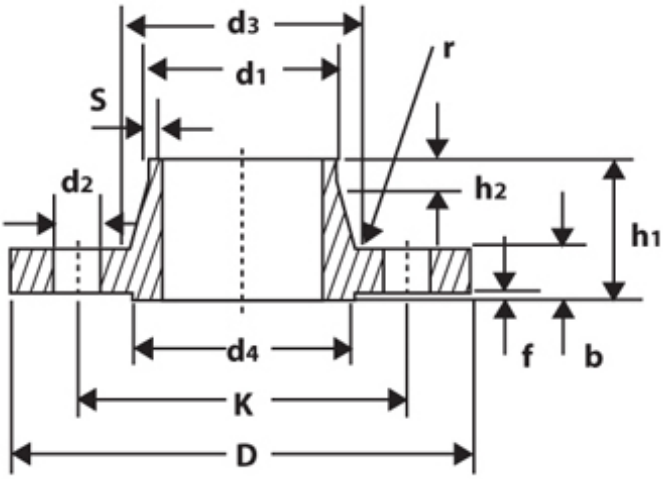

DN	d1		D	b	k	h1	d3	S	r	h2	d4	f	No. of holes	d2	KG
	ISO	DIN													
10	-	14	90	16	60	35	25	1.8	4	6	40	2	4	14	0.67
	17.2	-	90	16	60	35	28	1.8	4	6	40	2	4	14	0.66
15	-	20	95	16	65	38	30	2	4	6	45	2	4	14	0.75
	21.3	-	95	16	65	38	32	2	4	6	45	2	4	14	0.75
20	-	25	105	18	75	40	38	2.3	4	6	58	2	4	14	1.07
	26.9	-	105	18	75	40	40	2.3	4	6	58	2	4	14	1.07
25	-	30	115	18	85	40	42	2.6	4	6	68	2	4	14	1.29
	33.7	-	115	18	85	40	46	2.6	4	6	68	2	4	14	1.28
32	-	38	140	18	100	42	52	2.6	6	6	78	2	4	18	1.88
	42.4	-	140	18	100	42	56	2.6	6	6	78	2	4	18	1.86
40	-	44.5	150	18	110	45	60	2.6	6	7	88	3	4	18	2.1
	48.3	-	150	18	110	45	64	2.6	6	7	88	3	4	18	2.08
50	-	57	165	20	125	48	72	2.9	6	8	102	3	4	18	2.81
	60.3	-	165	20	125	48	75	2.9	6	8	102	3	4	18	2.78
65	76.1	-	185	22	145	52	90	2.9	6	10	122	3	8	18	3.61
80	88.9	-	200	24	160	58	105	3.2	8	12	138	3	8	18	4.62
100	-	106	235	24	190	65	128	3.6	8	12	162	3	8	22	6.42
	114.3	-	235	24	190	65	134	3.6	8	12	162	3	8	22	6.27
125	-	133	270	26	220	68	155	4	8	12	188	3	8	26	8.83
	139.7	-	270	26	220	68	162	4	8	12	188	3	8	26	8.61
150	-	159	300	28	250	75	182	4.5	10	12	218	3	8	26	11.67
	166.3	-	300	28	250	75	192	4.5	10	12	218	3	8	26	11.29
175	193.7	-	330	28	280	75	218	5.6	10	15	248	3	12	26	13.11
200	219.1	-	360	30	310	80	244	6.3	10	16	278	3	12	26	16.61
250	-	267	425	32	370	88	292	7.1	12	18	335	3	12	30	23.99
	273	-	425	32	370	88	298	7.1	12	18	335	3	12	30	23.48
300	323.9	-	485	34	430	92	352	8	12	18	395	4	16	30	30.74
350	355.6	-	555	38	490	100	398	8	12	20	450	4	16	33	47.20
	-	368	555	38	490	100	398	8	12	20	450	4	16	33	44.22
400	406.4	-	620	40	550	110	452	8.8	12	20	505	4	16	36	61.69
	-	419	620	40	550	110	452	8.8	12	20	505	4	16	36	57.88
500	508	-	730	44	660	125	558	10	12	20	615	4	20	36	89.57
600	610	-	845	46	770	125	660	11	12	20	720	5	20	39	114.96
700	711	-	960	46	875	125	760	12.5	12	20	820	5	24	42	139.5
800	813	-	1085	50	990	135	865	14.2	12	22	930	5	24	48	188.71
900	914	-	1185	54	1090	145	968	16	12	24	1030	5	28	48	231.48
1000	1016	-	1320	58	1210	155	1070	17.5	16	24	1140	5	28	56	303.52

Dimensions in millimeter (mm).

DIN 2635 Welding Neck Flange PN40

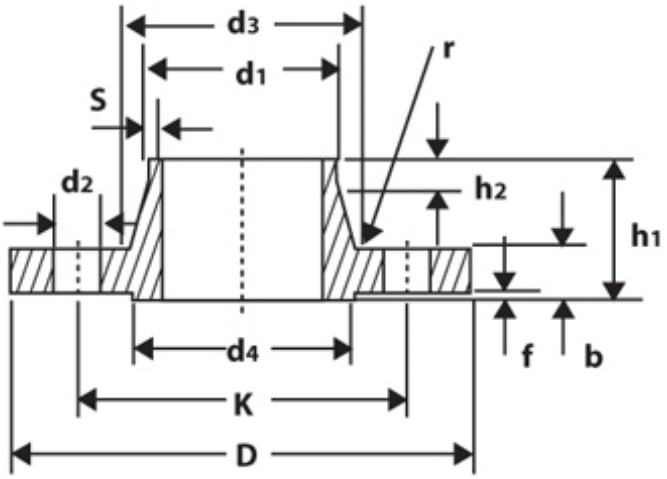

DN	d1		D	b	k	h1	d3	S	r	h2	d4	f	No. of holes	d2	KG
	ISO	DIN													
10	-	14	90	16	60	35	25	1.8	4	6	40	2	4	14	0.67
	17.2	-	90	16	60	35	28	1.8	4	6	40	2	4	14	0.66
15	-	20	95	16	65	38	30	2	4	6	45	2	4	14	0.75
	21.3	-	95	16	65	38	32	2	4	6	45	2	4	14	0.75
20	-	25	105	18	75	40	48	2.3	4	6	58	2	4	14	1.07
	26.9	-	105	18	75	40	40	2.3	4	6	58	2	4	14	1.07
25	-	30	115	18	85	40	42	2.6	4	6	68	2	4	14	1.29
	33.7	-	115	18	85	40	46	2.6	4	6	68	2	4	14	1.28
32	-	38	140	18	100	42	52	2.6	6	6	78	2	4	18	1.88
	42.4	-	140	18	100	42	56	2.6	6	6	78	2	4	18	1.86
40	-	44.5	150	18	110	45	60	2.6	6	7	88	3	4	18	2.1
	48.3	-	150	18	110	45	64	2.6	6	7	88	3	4	18	2.08
50	-	57	165	20	125	48	72	2.9	6	8	102	3	4	18	2.81
	60.3	-	165	20	125	48	75	2.9	6	8	102	3	4	18	2.78
65	76.1	-	185	22	145	52	90	2.9	6	10	122	3	8	18	3.81
80	88.9	-	200	24	160	58	105	3.2	8	12	138	3	8	18	4.62
100	-	108	235	24	190	65	128	3.8	8	12	162	3	8	22	6.42
	114.3	-	235	24	190	65	134	3.6	8	12	162	3	8	22	6.27
125	-	133	270	26	220	68	155	4	8	12	188	3	8	26	8.83
	139.7	-	270	26	220	68	162	4	8	12	188	3	8	26	8.61
150	-	159	300	28	250	75	182	4.5	10	12	218	3	8	26	11.67
	168.3	-	300	28	250	75	192	4.5	10	12	218	3	8	26	11.29
175	193.7	-	350	32	295	82	218	5.6	10	15	260	3	12	30	17.01
200	219.1	-	375	34	320	88	244	6.3	10	16	285	3	12	30	20.49
250	-	267	450	38	385	105	298	7.1	12	18	345	3	12	33	33.75
	273	-	450	38	385	105	306	7.1	12	18	345	3	12	33	33.34
300	323.9	-	515	42	450	115	362	8	12	18	410	4	16	33	46.55
350	355.6	-	580	46	510	125	408	8.8	12	20	465	4	16	36	67.73
	-	368	580	46	510	125	408	8.8	12	20	465	4	16	36	63.96
400	406.4	-	660	50	585	135	462	11	12	20	535	4	16	39	96.73
	-	419	660	50	585	135	462	11	12	20	535	4	16	39	91.99
500	508	-	755	52	670	140	562	14.2	12	20	615	4	20	42	120.96

Dimensions in millimeter (mm).

DIN 2636 Welding Neck Flange PN64

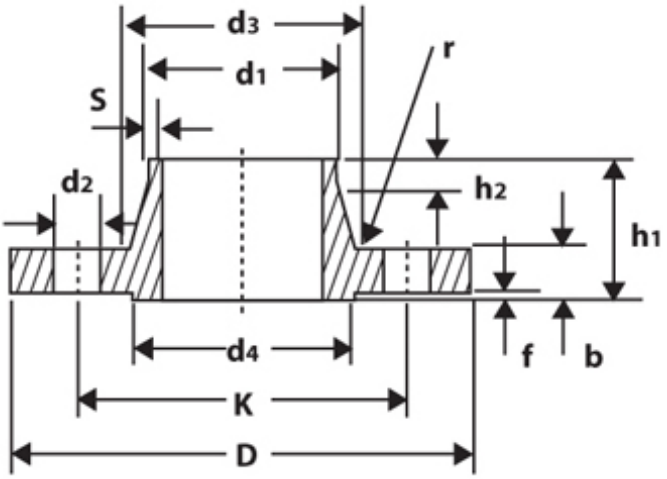

DN	d1		D	b	k	h1	d3	S	r	h2	d4	f	No. of holes	d2	KG
	ISO	DIN													
10	-	14	100	20	70	45	28	1.8	4	6	40	2	4	14	1.07
	17.2	-	100	20	70	45	32	1.8	4	6	40	2	4	14	1.08
15	-	20	105	20	75	45	32	2.0	4	6	45	2	4	14	1.19
	21.3	-	105	20	75	45	34	2.0	4	6	45	2	4	14	1.19
25	-	30	140	24	100	58	48	2.6	4	8	68	2	4	18	2.61
	33.7	-	140	24	100	58	52	2.6	4	8	68	2	4	18	2.60
40	-	44.5	170	26	125	62	65	2.9	6	10	88	3	4	22	4.00
	48.3	-	170	26	125	62	70	2.9	6	10	88	3	4	22	3.99
50	-	57	180	26	135	62	78	2.9	6	10	102	3	4	22	4.45
	60.3	-	180	26	135	62	82	2.9	6	10	102	3	4	22	4.42
65	76.1	-	205	26	160	66	98	3.2	6	12	122	3	8	22	5.49
80	88.9	-	215	28	170	72	112	3.6	8	12	138	3	8	22	6.50
100	-	108	250	30	200	76	132	4.0	8	12	162	3	8	26	9.25
	114.3	-	250	30	200	76	138	4.0	8	12	162	3	8	26	9.06
125	-	133	295	34	240	88	162	4.5	8	12	188	3	8	30	14.53
	139.7	-	295	34	240	88	168	4.5	8	12	188	3	8	30	14.23
150	-	159	345	36	280	95	192	5.6	10	12	218	3	8	33	21.35
	168.3	-	345	36	280	95	202	5.6	10	12	218	3	8	33	20.92
175	193.7	-	375	40	310	105	228	6.3	10	16	260	3	12	33	26.28
200	219.1	-	415	42	345	110	256	7.1	10	16	285	3	12	36	33.56
250	-	267	470	46	400	125	310	8.8	12	18	345	3	12	36	47.98
	273.0	-	470	46	400	125	316	8.8	12	18	345	3	12	36	47.32
300	323.9	-	530	52	460	140	372	11.0	12	18	410	4	16	36	66.44
350	355.6	-	600	56	525	150	420	12.5	12	20	465	4	16	39	96.23
	-	368	600	56	525	150	420	12.5	12	20	465	4	16	39	91.77
400	406.4	-	670	60	585	160	475	14.2	12	20	535	4	16	42	127.70
	-	419	670	60	585	160	475	14.2	12	20	535	4	16	42	122.13

Dimensions in millimeter (mm).

DIN 2637 Welding Neck Flange PN100

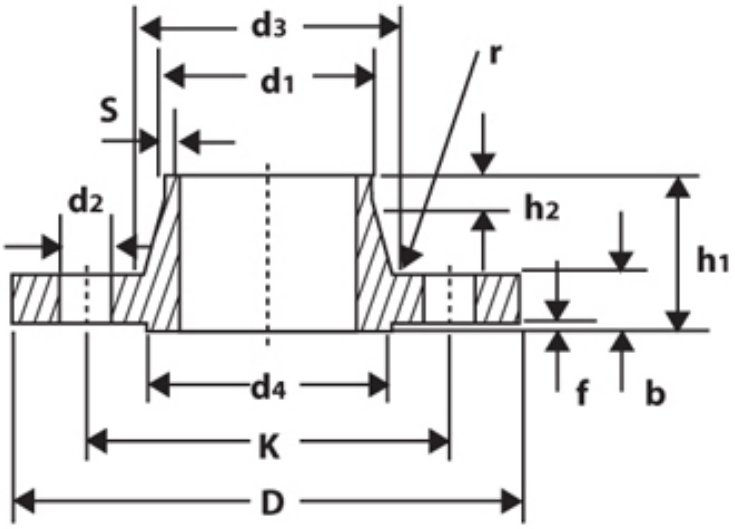

DN	d1		D	b	k	h1	d3	S	r	h2	d4	f	No. of holes	d2	KG
	ISO	DIN													
10	-	14	100	20	70	45	28	1.8	4	6	40	2	4	14	1.07
	17.2	-	100	20	70	45	32	1.8	4	6	40	2	4	14	1.08
15	-	20	105	20	75	45	32	2.0	4	6	45	2	4	14	1.19
	21.3	-	105	20	75	45	34	2.0	4	6	45	2	4	14	1.19
25	-	30	140	24	100	58	48	2.6	4	8	68	2	4	18	2.61
	33.7	-	140	24	100	58	52	2.6	4	8	68	2	4	18	2.60
40	-	44.5	170	26	125	62	65	2.9	6	10	88	3	4	22	4.00
	48.3	-	170	26	125	62	70	2.9	6	10	88	3	4	22	3.99
50	-	57	195	28	145	68	86	3.2	6	10	102	3	4	26	5.72
	60.3	-	195	28	145	68	90	3.2	6	10	102	3	4	26	5.70
65	76.1	-	220	30	170	76	108	3.6	6	12	122	3	8	26	7.43
80	88.9	-	230	32	180	78	120	4.0	8	12	138	3	8	26	8.58
100	-	108	265	36	210	90	145	5.0	8	12	162	3	8	30	13.02
	114.3	-	265	36	210	90	150	5.0	8	12	162	3	8	30	12.79
125	-	133	315	40	250	105	180	6.3	8	12	188	3	8	33	21.29
	139.7	-	315	40	250	105	180	6.3	8	12	188	3	8	33	20.68
150	-	159	355	44	290	115	210	7.1	10	12	218	3	12	33	28.90
	168.3	-	355	44	290	115	210	7.1	10	12	218	3	12	33	27.76
175	193.7	-	385	48	320	127	245	8.8	10	16	260	3	12	33	36.94
200	219.1	-	430	52	360	130	278	10.0	10	16	285	3	12	36	49.35
250	-	267	505	60	430	157	340	12.5	12	18	345	3	12	39	81.71
	273.0	-	505	60	430	157	340	12.5	12	18	345	3	12	39	80.09
300	323.9	-	585	68	500	170	400	14.2	12	18	410	4	16	42	116.25
350	355.6	-	655	74	560	189	460	16.0	12	20	465	4	16	48	166.09
	-	368	655	74	560	189	460	16.0	12	20	465	4	16	48	160.53

Dimensions in millimeter (mm).

DIN 2638 Welding Neck Flange PN160

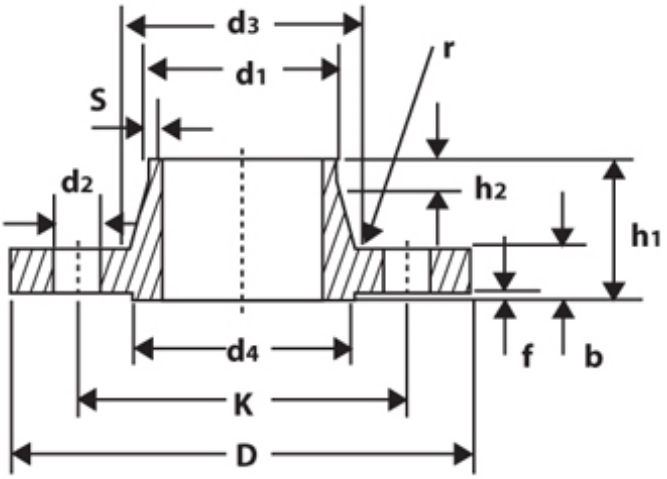

DN	d1		D	b	k	h1	d3	S	r	h2	d4	f	No. of holes	d2	KG
	ISO	DIN													
10	-	14	100	20	70	45	28	2.0	4	6	40	2	4	14	1.08
	17.2	-	100	20	70	45	32	2.0	4	6	40	2	4	14	1.08
15	-	20	105	20	75	45	32	2.0	4	6	45	2	4	14	1.19
	21.3	-	105	20	75	45	34	2.0	4	6	45	2	4	14	1.19
25	-	30	140	24	100	58	48	2.9	4	8	68	2	4	18	2.62
	33.7	-	140	24	100	58	52	2.9	4	8	68	2	4	18	2.62
40	-	44.5	170	28	125	64	65	3.6	6	10	88	3	4	22	4.36
	48.3	-	170	28	125	64	70	3.6	6	10	88	3	4	22	4.34
50	-	57	195	30	145	75	86	4.0	6	10	102	3	4	26	6.28
	60.3	-	195	30	145	75	90	4.0	6	10	102	3	4	26	6.27
65	76.1	-	220	34	170	82	108	5.0	6	12	122	3	8	26	8.61
80	88.9	-	230	36	180	86	120	6.3	8	12	138	3	8	26	10.09
100	-	108	265	40	210	100	145	8.0	8	12	162	3	8	30	15.28
	114.3	-	265	40	210	100	150	8.0	8	12	162	3	8	30	15.07
125	-	133	315	44	250	115	180	10.0	8	14	188	3	8	33	24.68
	139.7	-	315	44	250	115	180	10.0	8	14	188	3	8	33	24.09
150	-	159	355	50	290	128	210	12.5	10	14	218	3	12	33	35.14
	168.3	-	355	50	290	128	210	12.5	10	14	218	3	12	33	34.02
175	193.7	-	390	54	320	138	245	14.2	10	16	260	3	12	36	44.90
200	219.1	-	490	60	360	140	278	16.0	10	16	285	3	12	36	60.03
250	-	267	515	68	430	155	340	20.0	12	18	345	3	12	42	98.05
	273	-	515	68	430	155	340	20.0	12	18	345	3	12	42	96.52
300	323.9	-	585	76	500	175	400	22.2	12	18	410	4	16	42	138.80

Dimensions in millimeter (mm).

DIN 2641 Lapped (Lapped Joint) Flange, Plain Collar PN6

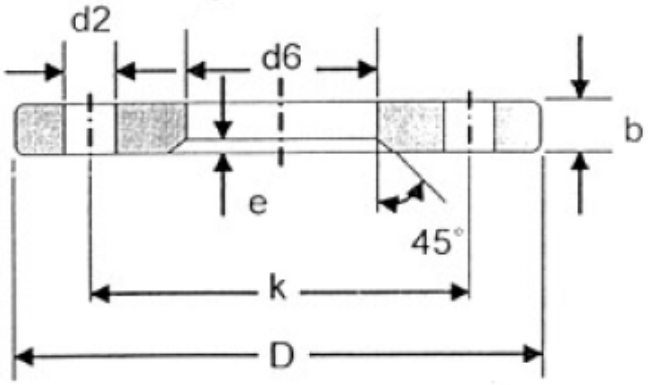

DN	Pipe OD		D	d6	b	k	e	No. of holes	d2	KG
	ISO	DIN								
10	-	14	75	16	10	50	2	4	11	0.3
	17.2	-	75	19	10	50	2	4	11	0.29
15	-	20	80	22	10	55	2	4	11	0.33
	21.3	-	80	24	10	55	2	4	11	0.33
20	-	25	90	28	10	65	2	4	11	0.42
	26.9	-	90	30	10	65	2	4	11	0.41
25	-	30	100	33	12	75	3	4	11	0.62
	33.7	-	100	36	12	75	3	4	11	0.61
32	-	38	120	42	12	90	3	4	14	0.88
	42.4	-	120	46	12	90	3	4	14	0.85
40	-	44.5	130	50	12	100	3	4	14	1.01
	48.3	-	130	54	12	100	3	4	14	0.98
50	-	57	140	62	12	110	3	4	14	1.11
	60.3	-	140	65	12	110	3	4	14	1.08
65	76.1	-	160	81	12	130	3	4	14	1.35
80	88.9	-	190	94	14	150	3	4	18	2.24
100	-	108	210	113	14	170	3	4	18	2.59
	114.3	-	210	119	14	170	3	4	18	2.47
125	-	133	240	138	14	200	3	8	18	3.1
	139.7	-	240	145	14	200	3	8	18	2.93
150	-	159	265	164	14	225	3	8	18	3.52
	168.3	-	265	173	14	225	3	8	18	3.25
200	219.1	-	320	225	16	280	3	8	18	4.85
250	-	267	375	273	20	335	3	12	18	7.67
	273	-	375	279	20	335	3	12	18	7.26
300	323.9	-	440	329	24	395	4	12	22	11.77
350	355.6	-	490	362	26	445	4	12	22	16.55
	-	368	490	374	26	445	4	12	22	15.13
400	406.4	-	540	413	28	495	4	16	22	19.56
	-	419	540	426	28	495	4	16	22	17.67
500	508	-	645	517	32	600	4	20	22	27.43
600	610	-	755	618	36	705	4	20	26	38.75
700	711	-	860	721	40	810	4	24	26	50.19
800	813	-	975	824	44	920	4	24	30	67.83
900	914	-	1075	926	48	1020	4	24	30	81.84
1000	1016	-	1175	1028	52	1120	4	28	30	95.74
1200	1220	-	1405	1232	60	1340	5	32	33	155.87

Dimensions in millimeter (mm).

DIN 2642 Lapped (Lapped Joint) Flange, Plain Collar PN10

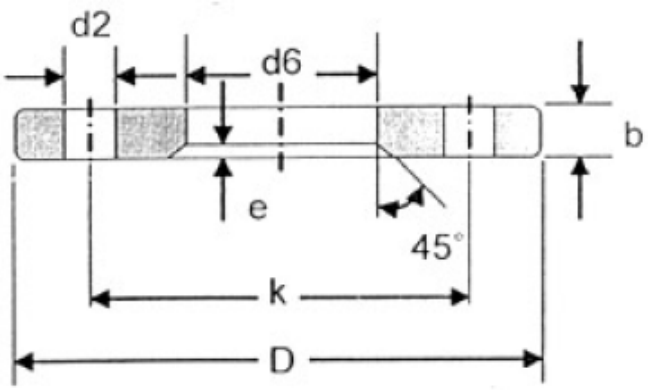

DN	Pipe OD		D	d6	b	k	e	No. of holes	d2	KG
	ISO	DIN								
10	-	14	90	16	14	60	3	4	14	0.61
	17.2	-	90	19	14	60	3	4	14	0.60
15	-	20	95	22	14	65	3	4	14	0.67
	21.3	-	95	24	14	65	3	4	14	0.66
20	-	25	105	28	14	75	3	4	14	0.82
	26.9	-	105	30	14	75	3	4	14	0.81
25	-	30	115	33	16	85	4	4	14	1.12
	33.7	-	115	36	16	85	4	4	14	1.10
32	-	38	140	42	16	100	4	4	18	1.63
	42.4	-	140	46	16	100	4	4	18	1.60
40	-	44.5	150	50	16	110	4	4	18	1.85
	48.3	-	150	54	16	110	4	4	18	1.80
50	-	57	165	62	16	125	5	4	18	2.18
	60.3	-	165	65	16	125	5	4	18	2.14
65	76.1	-	185	81	16	145	5	4	18	2.60
80	88.9	-	200	94	18	160	5	8	18	3.17
100	-	108	220	113	18	180	5	8	18	3.67
	114.3	-	220	119	18	180	5	8	18	3.51
125	-	133	250	138	18	210	5	8	18	4.53
	139.7	-	250	145	18	210	5	8	18	4.32
150	-	159	285	164	18	240	5	8	22	5.60
	168.3	-	285	173	18	240	5	8	22	5.26
200	219.1	-	340	225	20	295	5	8	22	7.53
250	-	267	395	273	22	350	5	12	22	10.27
	273	-	395	279	22	350	5	12	22	9.82
300	323.9	-	445	329	26	400	5	12	22	13.46
350	355.6	-	505	362	28	460	6	16	22	20.07
	-	368	505	374	28	460	6	16	22	18.54
400	406.4	-	565	413	32	515	6	16	26	27.19
	-	419	565	426	32	515	6	16	26	25.04
500	508	-	670	517	38	620	6	20	26	39.38
600	610	-	780	618	44	725	7	20	30	56.55
700	711	-	895	721	50	840	7	24	30	80.02
800	813	-	1015	824	56	950	7	24	33	112.25
900	914	-	1115	926	62	1050	7	28	33	135.80
1000	1016	-	1230	1026	70	1160	7	28	36	182.96

Dimensions in millimeter (mm).

DIN 2652 Loose Flange And Ring For Welding PN6

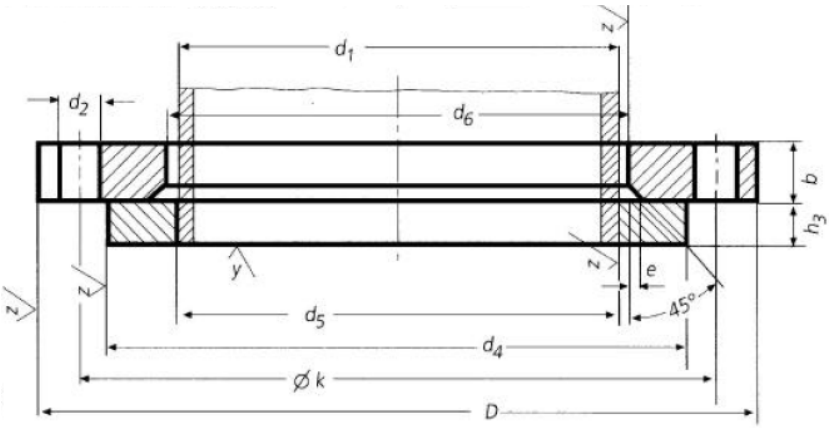

DN	d1		D	d6	b	k	e	No. of holes	Thread	d2	d4	d5	h3	KG Flange	KG Ring
	ISO	DIN													
10	-	14	75	16	10	50	5	4	M10	11	35	14.5	8	0.298	0.051
	17.2	-	75	19	10	50	5	4	M10	11	35	17.7	8	0.298	0.051
15	-	20	80	22	10	55	5	4	M10	11	40	21	8	0.337	0.063
	21.3	-	80	24	10	55	5	4	M10	11	40	22	8	0.337	0.063
20	-	25	90	28	10	65	5	4	M10	11	50	26	10	0.418	0.116
	26.9	-	90	30	10	65	5	4	M10	11	50	27.6	10	0.418	0.116
25	-	30	100	33	12	75	6	4	M10	11	60	31	10	0.620	0.166
	33.7	-	100	36	12	75	6	4	M10	11	60	34.4	10	0.620	0.166
32	-	38	120	42	12	90	6	4	M12	14	70	39	10	0.874	0.213
	42.4	-	120	46	12	90	6	4	M12	14	70	43.1	10	0.874	0.213
40	-	44.5	130	50	12	100	6	4	M12	14	80	45.5	10	1.010	0.273
	48.3	-	130	54	12	100	6	4	M12	14	80	49	10	1.010	0.273
50	-	57	140	62	12	110	6	4	M12	14	90	58.1	12	1.120	0.359
	60.3	—	140	65	12	110	6	4	M12	14	90	61.1	12	1.120	0.359
65	76.1	-	160	81	12	130	6	4	M12	14	110	77.1	12	1.350	0.468
80	88.9	—	190	94	14	150	6	4	M16	18	128	90.3	14	2.240	0.730
100	-	108	210	113	14	170	6	4	M16	18	148	109.6	14	2.590	0.884
	114.3	-	210	119	14	170	6	4	M16	18	148	115.9	14	2.590	0.884
125	-	133	240	138	14	200	6	8	M16	18	178	134.8	14	3.100	1.210
	139.7	-	240	145	14	200	6	8	M16	18	178	141.6	14	3.100	1.210
150	-	159	265	164	14	225	6	8	M16	18	202	161.1	14	3.520	1.340
	168.3	-	265	173	14	225	6	8	M16	18	202	170.5	14	3.520	1.340
200	219.1	-	320	225	16	280	8	8	M16	18	258	221.8	16	4.980	2.000
250	-	267	375	273	20	335	8	8	M16	18	312	270.2	18	7.670	2.890
	273	-	375	279	20	335	8	12	M16	18	312	276.2	18	7.670	2.890
300	323.9	-	440	329	24	395	8	12	M20	22	365	327.6	18	12.30	3.560
350	355.6	-	590	362	26	445	8	12	M20	22	415	359.7	18	15.10	4.080
	-	368	590	374	26	445	8	12	M20	22	415	372.2	18	15.10	4.080
400	406.4	-	540	413	28	495	8	16	M20	22	465	411	20	17.70	4.910
	-	419	540	426	28	495	8	16	M20	22	465	423.7	20	17.70	4.910
(450)	457	-	595	467	30	550	8	16	M20	22	520	462.5	20	20.40	5.700
500	508	-	645	517	32	600	8	20	M20	22	570	513.6	22	25.40	7.390

Dimensions in millimeter (mm).

DIN 2653 Loose Flange And Ring For Welding PN10

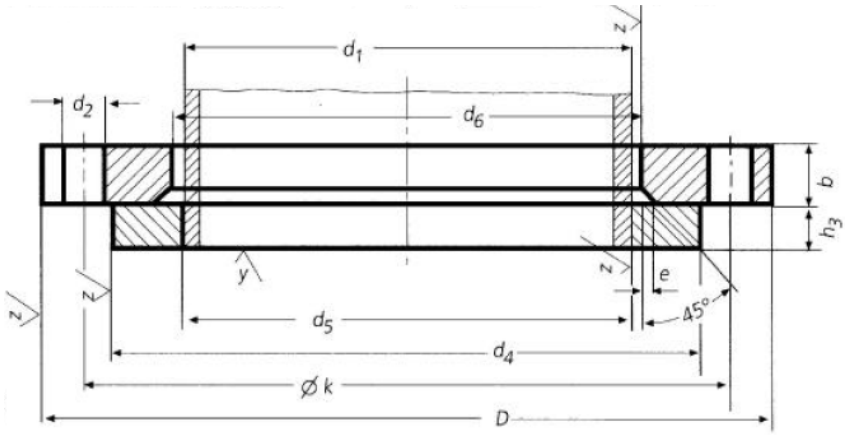

DN	d1		D	d6	b	k	e	No. of holes	Thread	d2	d4	d5	h3	KG Flange	KG Ring
	ISO	DIN													
10	-	14	90	16	14	60	5	4	M12	14	40	14.5	10	0.599	0.087
	17.2	-	90	19	14	60	5	4	M12	14	40	17.7	10	0.599	0.087
15	-	20	95	22	14	65	5	4	M12	14	45	21	10	0.689	0.105
	21.3	-	95	24	14	65	5	4	M12	14	45	22	10	0.689	0.105
20	-	25	105	28	14	75	5	4	M12	14	58	26	12	0.806	0.203
	26.9	-	105	30	14	75	5	4	M12	14	58	27.6	12	0.806	0.203
25	-	30	115	33	16	85	6	4	M12	14	68	31	12	0.110	0.276
	33.7	-	115	36	16	85	6	4	M12	14	68	34.4	12	0.110	0.276
32	-	38	140	42	16	100	6	4	M16	18	78	39	12	1.640	0.343
	42.4	-	140	46	16	100	6	4	M16	18	78	43.1	12	1.640	0.343
40	-	44.5	150	50	16	110	6	4	M16	18	88	45.5	12	1.860	0.426
	48.3	-	150	54	16	110	6	4	M16	18	88	49	12	1.860	0.426
50	-	57	165	62	16	125	6	4	M16	18	102	58.1	14	2.200	0.618
	60.3	—	165	65	16	125	6	4	M16	18	102	61.1	14	2.200	0.618
65	76.1	-	185	81	16	145	6	4	M16	18	122	77.1	14	2.620	0.786
80	88.9	—	200	94	18	160	6	4	M16	18	138	90.3	16	3.320	1.100
100	-	108	220	113	18	180	6	4	M16	18	158	109.6	16	3.670	1.310
	114.3	-	220	119	18	180	6	4	M16	18	158	115.9	16	3.670	1.310
125	-	133	250	138	18	210	6	8	M16	18	188	134.8	18	4.540	1.960
	139.7	-	250	145	18	210	6	8	M16	18	188	141.6	18	4.540	1.960
150	-	159	285	164	18	240	6	8	M20	22	212	161.1	18	5.600	2.180
	168.3	-	285	173	18	240	6	8	M20	22	212	170.5	18	5.600	2.180
200	219.1	-	340	225	20	295	8	8	M20	22	268	221.8	20	7.460	3.100
250	-	267	395	273	22	350	8	8	M20	22	320	270.2	22	10.30	4.220
	273	-	395	279	22	350	8	12	M20	22	320	276.2	22	10.30	4.220
300	323.9	-	445	329	26	400	8	12	M20	22	370	327.6	22	14.00	4.850
350	355.6	-	505	362	28	460	8	12	M20	22	430	359.7	22	18.50	6.710
	-	368	505	374	28	460	8	12	M20	22	430	372.2	22	18.50	6.710
400	406.4	-	565	413	32	515	8	16	M24	26	482	411	24	25.00	8.280
	-	419	565	426	32	515	8	16	M24	26	482	423.7	24	25.00	8.280
(450)	457	-	615	467	38	565	8	16	M24	26	532	462.5	24	30.60	9.300
500	508	-	670	517	38	620	8	20	M24	26	585	513.6	26	37.00	11.50

Dimensions in millimeter (mm).

DIN 2655 Lapped (Lapped Joint) Flange, Plain Collar PN25

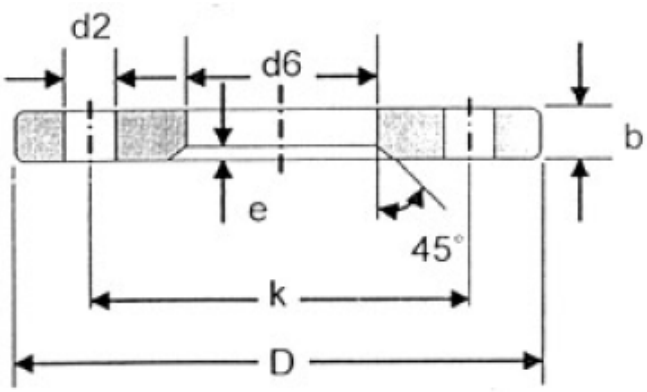

DN	Pipe OD		D	d6	b	k	e	No. of holes	d2	KG
	ISO	DIN								
10	-	14	90	16	16	60	5	4	14	0.7
	17.2	-	90	19	16	60	5	4	14	0.69
15	-	20	95	22	16	65	5	4	14	0.77
	21.3	-	95	24	16	65	5	4	14	0.76
20	-	25	105	28	16	75	5	4	14	0.93
	26.9	-	105	30	16	75	5	4	14	0.92
25	-	30	115	33	18	85	6	4	14	1.26
	33.7	-	115	36	18	85	6	4	14	1.24
32	-	38	140	42	18	100	6	4	18	1.84
	42.4	-	140	46	18	100	6	4	18	1.8
40	-	44.5	150	50	18	110	6	4	18	2.08
	48.3	-	150	54	18	110	6	4	18	2.03
50	-	57	165	62	20	125	6	4	18	2.72
	60.3	-	165	65	20	125	6	4	18	2.68
65	76.1	-	185	81	20	145	6	8	18	3.09
80	88.9	-	200	94	22	160	6	8	18	3.88
100	-	108	235	113	22	190	6	8	22	5.23
	114.3	-	235	119	22	190	6	8	22	5.04
125	-	133	270	138	24	220	6	8	26	7.17
	139.3	-	270	145	24	220	6	8	26	6.88
150	-	159	300	164	24	250	6	8	26	8.54
	166.3	-	300	173	24	250	6	8	26	8.08
200	219.1	-	360	225	26	310	8	12	26	11.36
250	-	267	425	273	30	370	8	12	30	17.63
	273	-	425	279	30	370	8	12	30	17.01
300	323.9	-	485	329	34	430	8	16	30	23.6
350	355.6	-	555	362	38	490	8	16	33	37.38
	-	363	555	374	38	490	8	16	33	35.31
400	406.4	-	620	413	42	550	8	16	36	50
	-	419	620	426	42	550	8	16	36	47.18
500	508	-	730	517	50	660	8	20	36	73.88

Dimensions in millimeter (mm).

DIN 2656 Lapped (Lapped Joint) Flange, Plain Collar PN40

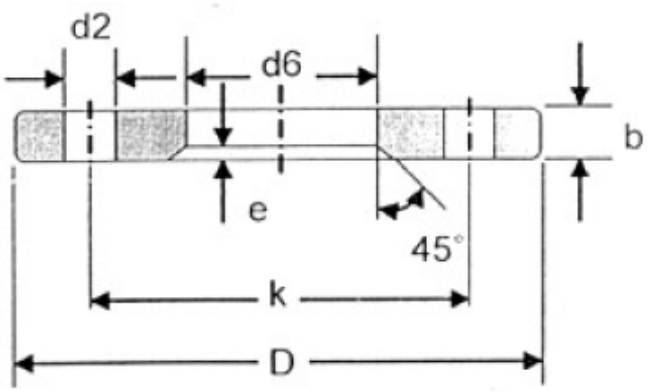

DN	Pipe OD		D	d6	b	k	e	No. of holes	d2	KG
	ISO	DIN								
10	-	14	90	16	16	60	5	4	14	0.7
	17.2	-	90	19	16	60	5	4	14	0.69
15	-	20	95	22	16	65	5	4	14	0.77
	21.3	-	95	24	16	65	5	4	14	0.76
20	-	25	105	28	16	75	5	4	14	0.93
	26.9	-	105	30	16	75	5	4	14	0.92
25	-	30	115	33	18	85	6	4	14	1.26
	33.7	-	115	36	18	85	6	4	14	1.24
32	-	38	140	42	18	100	6	4	18	1.84
	42.4	-	140	46	18	100	6	4	18	1.8
40	-	44.5	150	50	18	110	6	4	18	2.08
	48.3	-	150	54	18	110	6	4	18	2.03
50	-	57	165	62	20	125	6	4	18	2.72
	60.3	-	165	65	20	125	6	4	18	2.68
65	76.1	-	165	81	20	145	6	8	18	3.09
80	88.9	-	200	94	22	160	6	8	18	3.88
100	-	108	235	113	22	190	6	8	22	5.23
	114.3	-	235	119	22	190	6	8	22	5.04
125	-	133	270	138	24	220	6	8	26	7.17
	139.7	-	270	145	24	220	6	8	26	6.88
150	-	159	300	164	24	250	6	8	26	8.54
	168.3	-	300	173	24	250	6	8	26	8.09
200	219.1	-	375	225	30	320	8	12	30	14.65
250	-	267	450	273	36	385	8	12	33	25.5
	273	-	450	279	36	385	8	12	33	24.77
300	323.9	-	515	329	40	450	8	16	33	34.42
350	355.8	-	580	362	46	510	8	16	36	52.36
	-	363	580	374	46	510	8	16	36	49.85
400	406.4	-	660	413	50	585	8	16	39	74.2
	-	419	660	426	50	585	8	16	39	70.84

Dimensions in millimeter (mm).

DIN 2673 Loose Flange And Ring With Neck For Welding PN10

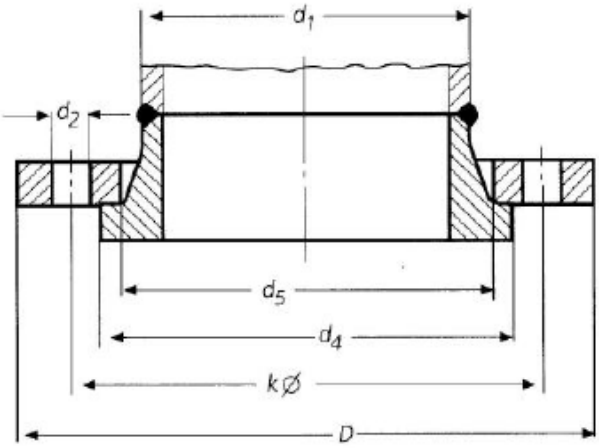

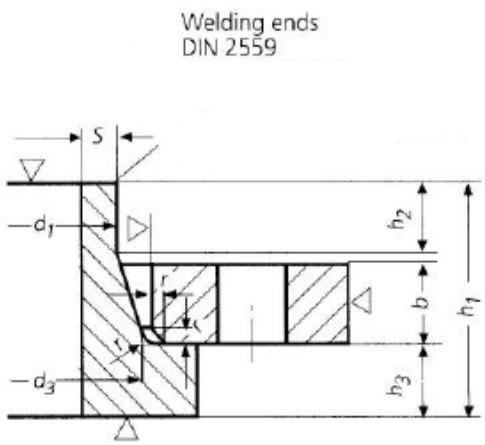

DN	d1	D	d5	b	k	No. of holes	Thread		d2	d4	h1	h3	d3	S	r	h2	KG Flange	KG Ring
10	14	90	25	14	60	4	M12	1/2”	14	40	35	10	22	1.8	2	6	0,566	0,117
	17,2	90	28	14	60	4	M12	1/2”	14	40	35	10	25	1.8	2	6	-	-
15	20	95	32	14	65	4	M12	1/2”	14	45	35	10	28	2	2	6	0,622	0,151
	21,3	95	34	14	65	4	M12	1/2”	14	45	35	10	30	2	2	6	-	-
20	25	105	38	14	75	4	M12	1/2”	14	58	40	12	35	2.3	2	6	0,747	0,273
	26,9	105	40	14	75	4	M12	1/2”	14	58	40	12	37	2.3	2	6	-	-
25	30	115	45	16	85	4	M12	1/2”	14	68	40	12	40	2.6	2	6	1,01	0,372
	33,7	115	48	16	85	4	M12	1/2”	14	68	40	12	43	2.6	2	6	-	-
32	38	140	55	16	100	4	M16	5/8”	18	78	40	12	50	2.6	2	6	1,5	0,485
	42,4	140	60	16	100	4	M16	5/8”	18	78	40	12	54	2.6	2	6	-	-
40	44,5	150	62	16	110	4	M16	5/8”	18	88	40	12	58	2.6	2	7	1,71	0,61
	48,3	150	66	16	110	4	M16	5/8”	18	88	40	12	62	2.6	2	7	-	-
50	57	165	75	16	125	4	M16	5/8”	18	102	45	14	70	2.9	2	8	2	0,888
	60,3	165	78	16	125	4	M16	5/8”	18	102	45	14	73	2.9	2	8	-	-
65	76,1	185	92	16	145	4	M16	5/8”	18	122	45	14	88	2.9	2	10	2,41	1,13
80	88,9	200	108	18	160	4	M16	5/8”	18	138	50	16	102	3.2	2	10	3	1,6
100	108	220	128	18	180	8	M16	5/8”	18	158	50	16	122	3.6	2	12	3,26	2,01
	114,3	220	135	18	180	8	M16	5/8”	18	158	50	16	128	3.6	2	12	-	-
125	133	250	152	18	210	8	M16	5/8”	18	188	50	18	148	4	3	12	4,07	2,86
	139,7	250	158	18	210	8	M16	5/8”	18	188	50	18	154	4	3	12	-	-
150	159	285	178	18	240	8	M20	3/4”	22	212	50	18	172	4.5	3	12	5,05	3,26
	168,3	285	188	18	240	8	M20	3/4”	22	212	50	18	181	4.5	3	12	-	-
200	216	340	235	20	295	8	M20	3/4”	22	268	55	20	230	5.9	3	16	6,7	5,13
	219,1	340	238	20	295	8	M20	3/4”	22	268	60	20	233	5.9	3	16	-	-
250	267	395	288	22	350	12	M20	3/4”	22	320	60	22	282	6.3	3	16	9,09	7,18
	273	395	294	22	350	12	M20	3/4”	22	320	60	22	288	6.3	3	16	-	-

Dimensions in millimeter (mm).

DIN 2673 Loose Flange And Ring With Neck For Welding PN10

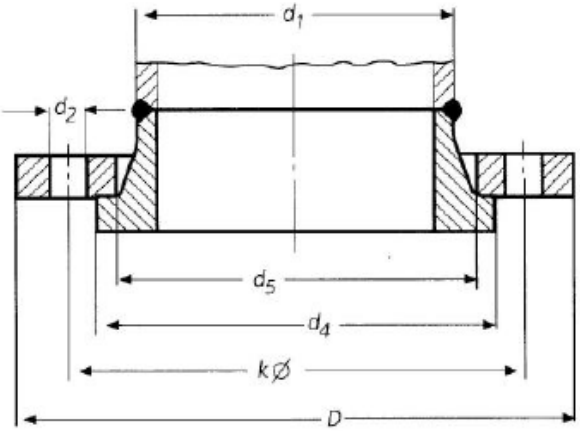

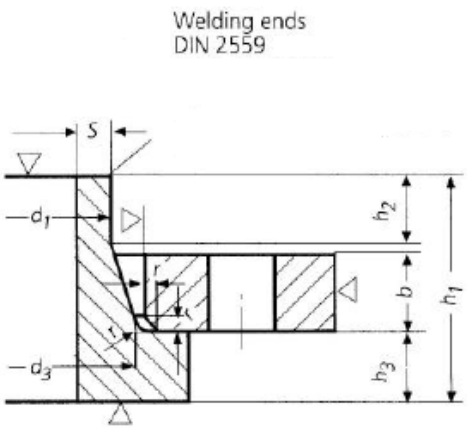

DN	d1	D	d5	b	k	No. of holes	Thread		d2	d4	h1	h3	d3	S	r	h2	KG Flange	KG Ring
300	318	445	338	26	400	12	M20	3/4”	22	370	60	22	332	7.1	3	16	12,5	8,5
	323.9	445	344	26	400	12	M20	3/4”	22	370	60	22	338	7.1	3	16	-	-
350	355,6	505	376	28	460	16	M20	3/4”	22	430	60	22	370	7.1	4	16	16,6	10,9
	368	505	388	28	460	16	M20	3/4”	22	430	60	22	382	7.1	4	16	-	-
400	406,4	565	430	32	515	16	M24	7/8”	26	482	65	24	426	7.1	4	16	22,4	14,2
	419	565	442	32	515	16	M24	7/8”	26	482	65	24	438	7.1	4	16	-	-
450	457	615	490	34	565	20	M24	7/8”	26	532	70	26	485	7.1	4	16	28,1	16,3
500	508	670	533	38	620	20	M24	7/8”	26	585	70	26	528	7.1	4	16	-	-
	521	670	545	38	620	20	M24	7/8”	26	585	70	26	540	7.1	4	16	32,5	19,4
600	609,6	780	633	44	725	20	M27	1”	30	685	80	26	628	7.1	4	18	-	-
	622	780	645	44	725	20	M27	1”	30	685	80	26	640	7.1	4	18	47,2	24,1
700	711,2	895	740	50	840	24	M27	1”	30	800	85	28	735	8	5	18	-	-
	720	895	748	50	840	24	M27	1”	30	800	85	28	742	8	5	18	67,6	34,4
800	812.8	1015	843	56	950	24	M30	1-1/8”	33	905	90	30	838	8	5	18	-	-
	820	1015	850	56	950	24	M30	1-1/8”	33	905	90	30	845	8	5	18	97	44,1
900	914,4	1115	947	62	1050	28	M30	1-1/8”	33	1005	95	32	940	10	5	20	-	-
	920	1115	952	62	1050	28	M30	1-1/8”	33	1005	95	32	945	10	5	20	117	54,1
1000	1016	1230	1050	68	1160	28	M33	1-1/4”	36	1110	100	34	1044	10	5	20	-	-
	1020	1230	1055	68	1160	28	M33	1-1/4”	36	1110	100	34	1048	10	5	20	152	69,2
1200	1220	1455	1260	80	1380	32	M36	1-3/8”	39	1330	110	38	1250	11	5	25	235	111

Dimensions in millimeter (mm).

DIN 28115 Long Neck Welding Flange PN10 and PN25

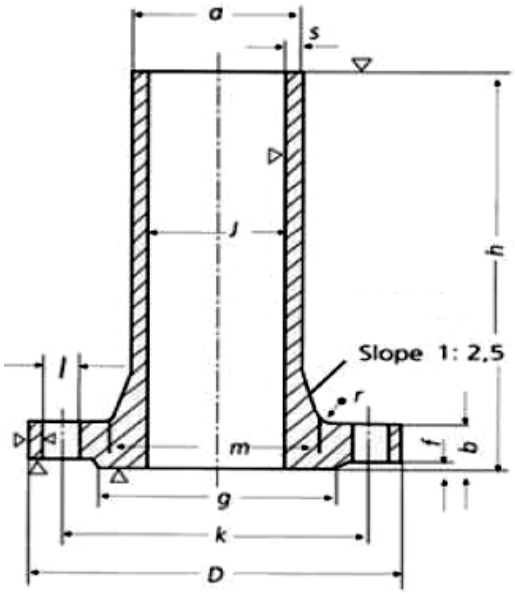

PN10																
DN	Service Pressure	a	s	D	j	b	h	m	r	g	f	k	No. of holes	l	Thread	KG
25	8 Kg/cm^2 200 ºC	38	7	115	24	16	120	50	8	68	2	85	4	14	M12(1/2")	1,7
32		51	8	140	35	16	120	62	8	78	2	100	4	18	M16(5/8")	2,8
40		57	8	150	41	16	120	70	8	88	3	110	4	18	M16(5/8")	3,2
50		70	8	165	54	18	120	85	8	102	3	125	4	18	M16(5/8")	4,2
65		89	8	185	73	18	170	104	8	122	3	145	4	18	M16(5/8")	6,8
80		102	8	200	86	20	170	118	8	138	3	160	4	18	M16(5/8")	7,8
100		121	10	220	101	20	170	138	8	158	3	180	8	18	M16(5/8")	9,7
125		146	10	250	126	22	170	164	10	188	3	210	8	18	M16(5/8")	11,6
150		171	10	285	151	22	170	188	10	212	3	240	8	23	M20(3/4")	14
200		224	10	340	204	22	170	246	10	268	3	295	8	23	M20(3/4")	20,4

PN25																			
DN	Nominal Pressure Kg/cm^2			Service Pressure to 200ºC	a	s	D	j	b	h	m	r	g	f	k	No. of holes	l	Thread	KG
25	16	25	40	32	38	7	115	24	18	120	50	8	68	2	85	4	14	M12(1/2")	1.9
32	16	25	40	32	51	8	140	35	18	120	62	8	78	2	100	4	18	M16(5/8")	3.0
40	16	25	40	32	57	8	150	41	18	120	70	8	88	3	110	4	18	M16(5/8")	3.2
50	16	25	40	32	70	8	165	54	20	120	85	8	102	3	125	4	18	M16(5/8")	4.5
65	16	.	.	13	89	8	185	73	22	170	104	8	122	3	145	4	18	M16(5/8")	7.5
	.	25	40	32	89	8	185	73	22	170	104	8	122	3	145	8	18	M16(5/8")	7.3
80	16	.	.	13	102	8	200	86	24	170	118	8	138	3	160	8	18	M16(5/8")	8.4
	.	25	40	32	102	8	200	86	24	170	118	8	138	3	160	8	18	M16(5/8")	8.4
100	16	.	.	13	121	10	220	101	24	170	138	8	158	3	180	8	18	M16(5/8")	9.8
125	16	.	.	13	146	10	250	126	26	170	164	10	188	3	210	8	18	M16(5/8")	12.6
150	16	.	.	13	171	10	285	151	28	170	188	10	212	3	240	8	23	M20(3/4")	15.8
200	16	.	.	13	224	10	340	204	34	170	246	10	268	3	295	12	23	M20(3/4")	24.2

Dimensions in millimeter (mm).

DIN 86029 Hubbed Slip-on Flange For Welding PN10

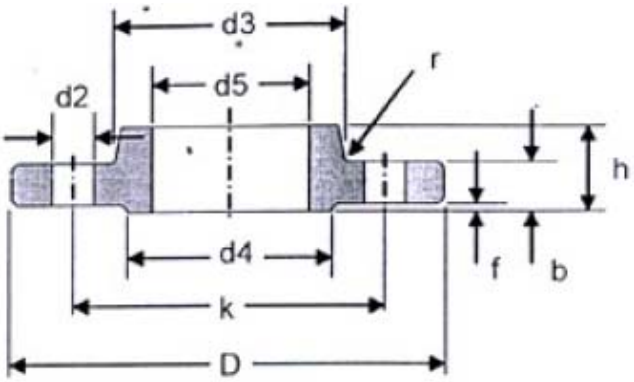

DN	Pipe OD	D	d5	b	k	h	d3	r	d4	f	No. of holes	d2	KG
10	17.2	90	17.7	14	60	20	30	4	40	2	4	14	0.56
15	21.3	95	22	14	65	20	35	4	45	2	4	14	0.62
20	26.9	105	27.6	16	75	24	45	4	58	2	4	14	0.91
25	33.7	115	34.4	16	85	24	52	5	68	2	4	14	1.09
32	42.4	140	43.1	16	100	26	60	5	78	2	4	18	1.58
40	48.3	150	49	16	110	26	70	5	88	3	4	18	1.76
50	60.3	165	61.1	18	125	28	85	5	102	3	4	18	2.39
65	76.1	185	77.1	18	145	32	105	5	122	3	4	18	3.1
80	88.9	200	90.3	20	160	34	118	5	138	3	8	18	3.77
100	114.3	220	115.9	20	180	38	140	5	158	3	8	18	4.29
125	139.7	250	141.6	22	210	40	168	5	188	3	8	18	5.86
150	168.3	285	170.5	22	240	44	196	5	212	3	8	22	7.22
175	193.7	315	196.1	24	270	44	224	6	242	3	8	22	9.18
200	219.4	340	222	24	295	44	247	6	268	3	8	22	9.95
250	273	395	276	26	350	46	300	6	320	3	12	22	12.69
300	323.9	445	327	26	400	46	352	6	370	4	12	22	14.4
350	355.6	505	359	26	460	53	398	10	430	4	16	22	22.36
400	406.4	565	410	26	515	57	448	10	482	4	16	26	26.85
450	457	615	461	28	565	62	502	10	532	4	20	26	32.53
500	508	670	512	28	620	67	552	10	585	4	20	26	37.84
600	610	780	614	28	725	75	658	10	685	5	20	30	49.32
700	711	895	716	30	840	77	760	10	800	5	24	30	63.86
800	813	1015	818	32	950	84	864	10	905	5	24	33	85.19
900	914	1115	920	34	1050	88	969	10	1005	5	28	33	101.36
1000	1016	1230	1022	34	1160	92	1071	10	1110	5	28	36	119.72

Dimensions in millimeter (mm).

DIN 86030 Hubbed Slip-on Flange For Welding PN16

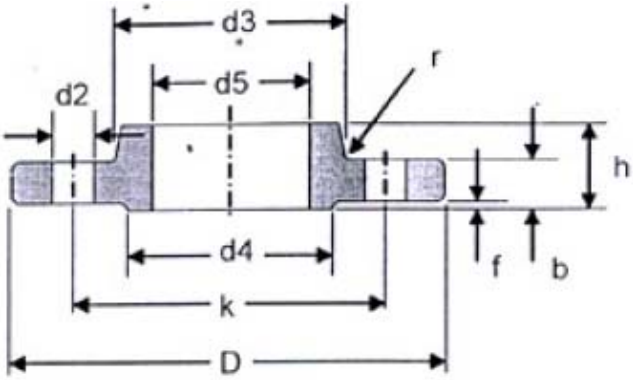

DN	Pipe OD	D	d5	b	k	h	d3	r	d4	f	No. of holes	d2	KG
10	17.2	90	17.7	14	60	20	30	4	40	2	4	14	0.56
15	21.3	95	22	14	65	20	35	4	45	2	4	14	0.62
20	26.9	105	27.6	16	75	24	45	4	58	2	4	14	0.91
25	33.7	115	34.4	16	85	24	52	5	68	2	4	14	1.09
32	42.4	140	43.1	16	100	26	60	5	78	2	4	18	1.58
40	48.3	150	49	16	110	26	70	5	88	3	4	18	1.76
50	60.3	165	61.1	18	125	28	85	5	102	3	4	18	2.39
65	76.1	185	77.1	18	145	32	105	5	122	3	4	18	3.1
80	88.9	200	90.3	20	160	34	118	5	138	3	8	18	3.77
100	114.3	220	115.9	20	180	38	140	5	158	3	8	18	4.29
125	139.7	250	141.6	22	210	40	168	5	188	3	8	18	5.86
150	168.3	285	170.5	22	240	44	196	5	212	3	8	22	7.22
175	193.7	315	196.1	24	270	44	224	6	242	3	8	22	9.18
200	219.4	340	222	24	295	44	247	6	268	3	12	22	9.7
250	273	405	276	26	355	46	300	6	320	3	12	26	13.5
300	323.9	460	327	28	410	46	355	6	378	4	12	26	17.29
350	355.6	520	359	30	470	57	400	10	438	4	16	26	27.68
400	406.4	580	410	32	525	63	457	10	490	4	16	30	36.13
450	457	640	461	34	585	68	505	10	550	4	20	30	44.25
500	508	715	512	34	650	73	559	10	610	4	20	33	56.88
600	610	840	614	36	770	83	664	10	725	5	20	36	80.95
700	711	910	716	36	840	83	760	10	795	5	24	36	76.84
800	813	1025	818	38	950	90	864	10	900	5	24	39	99.34
900	914	1125	920	40	1050	94	969	10	1000	5	28	39	116.63
1000	1016	1255	1022	42	1170	100	1073	10	1115	5	28	42	154.09

Dimensions in millimeter (mm).

SHRI PARVATI INDUSTRIES

EN 1092-1 FLANGES

Dimensional reference tables

ANSI / JIS / DIN / EN 1092-1 / BS

Reference data from the supplied technical catalogue.

Verify dimensions against the specified standard edition and approved project drawing before procurement.

This reference is not a declaration of stocked sizes, material grades or service suitability.

Dimensions, drawings, units and technical footnotes on the following table pages have been preserved.

EN 1092-1 Flanges Summary Chart

Description		Rated Pressure (in bar) (1 bar = 14.5 psi = 100 kPa)										
		6	10	16	25	40	63	100	160	250	320	400
01	Plate flanges for welding	V	V	V	V	V	V	V				
02	Loose plate flanges with weld-on plate collar	V	V	V	V	V						
04	Loose plate flanges with weld-neck collar	V	V	V	V	V						
05	Blank <blind> flanges	V	V	V	V	V	V	V				
11	Weld-Neck Flanges	V	V	V	V	V	V	V	V	V	V	V
12	Hubbed slip-on flanges for welding	V	V	V	V	V	V	V				
13	Hubbed threaded flanges			V		V	V	V				
21	Integral flanges	V	V	V	V	V	V	V	V	V	V	V
32	Weld-on plate collars	V	V	V	V	V						
33	Lapped pipe ends	V	V	V	V	V						
34	Weld-neck collars	V	V	V	V	V						

Flange Facing Type EN 1092-1

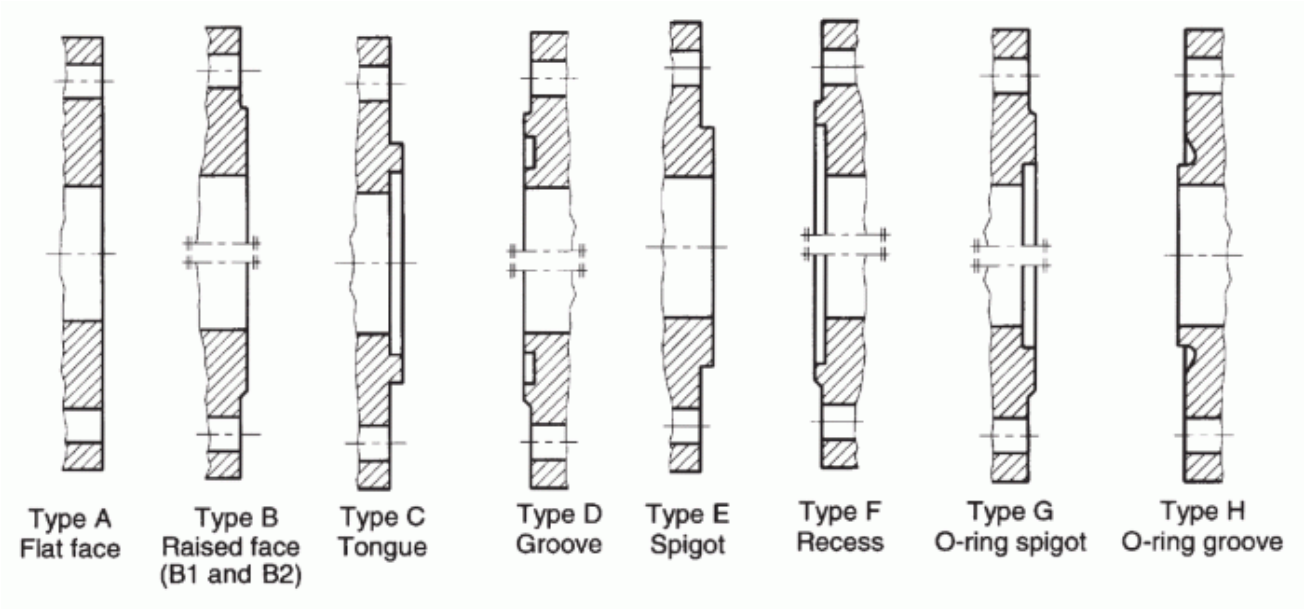

Note 1: For facings types B, D, F and G, the transition from the edge of the raised face to the flange shall be radius, or chamfer at the choice of the flange manufacturer.

Note 2: B1 and B2 are raised face (type B) for different applications.
For flanges and collars (except types 33, 36 and 37) with facing types A, B1, E and F, turning shall be carried out with a round nosed tool in accordance with Table as hereunder.

Surface finish for jointing faces

Facing types	Method of machining	Radius of tool nose mm	*Ra*[a] µm		*Rz*[a] µm	
		Min.	Min.	Max.	Min.	Max.
A, B1 [b], E, F	Turning [c]	1.0	3.2	12.5	12.5	50
B2 [b], C, D, G, H	Turning [c]	-	0.8	3.2	3.2	12.5
For certain applications, e.g. low temperature gases, it may be necessary to stipulate closer control to the surface finish.						

a} R_a and R_z are defined in EN ISO 4287.
b) Types B1 and B2 are raised face (type B) flanges with different specified surface roughness values.
B1 : Standard facing for all PN numbers.
B2 : Only if agreed between the purchaser and the flange manufacturer.
c) The term 'turning' includes any method of machine operation producing either serrated concentric or serrated spiral grooves.

Flanges type 05 up to PN 40 and collars (except types 33, 36 and 37) shall have type A facing, other flanges shall have type B1 facings; unless type B2 facing is agreed between the purchaser and the supplier.

Flange Facing Dimensions EN 1092-1

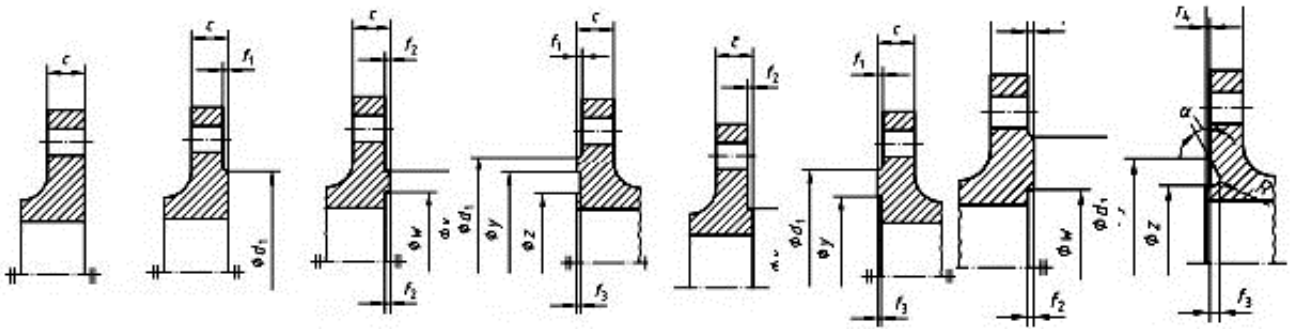

Type A flat face | **Type B raised face (B1 and B2)** | **Type C tongue face** | **Type D groove face** | **Type E spigot** | **Type F recess** | **Type G O ring recess** | **Type H O ring groove**

DN	d1												f1	f2	f3	f4	w**	x	y	z**	a≈	R
	PN2.5*	PN6*	PN10	PN16	PN25	PN40	PN63	PN100	PN160	PN250	PN320	PN400										
	mm	mm	mm	mm	mm	mm	mm	mm	mm	mm	mm	mm	mm	mm	mm	mm	mm	Mm	mm	mm		mm
10	35	35	40	40	40	40	40	40	40	40	40	40					24	34	35	23	-	
15	40	40	45	45	45	45	45	45	45	45	45	45					29	39	40	28	-	
20	50	50	58	58	58	58	58	58	58	58	58	58	2				36	50	51	35		
25	60	60	68	68	68	68	68	68	68	68	68	68					43	57	58	42		
32	70	70	78	78	78	78	78	78	78	78	78	78		4.5	4.0	2.0	51	65	66	50		2.5
40	80	80	88	88	88	88	88	88	88	88	88	88					61	75	76	60	41°	
50	90	90	102	102	102	102	102	102	102	102	102	102					73	87	88	72		
65	110	110	122	122	122	122	122	122	122	122	122	122					95	109	110	94		
80	128	128	138	138	138	138	138	138	138	138	138	138					106	120	121	105		
100	148	148	158	158	162	162	162	162	162	162	162	162	3				129	149	150	128		
125	178	178	188	188	188	188	188	188	188	188	188	188					155	175	176	154		
150	202	202	212	212	218	218	218	218	218	218	218	218		5.0	4.5	2.5	183	203	204	182	32°	3
200	258	258	268	268	278	285	285	285	285	285	285	285					239	259	260	238		
250	312	312	320	320	335	345	345	345	345	345	345	-					292	312	313	291		
300	365	365	370	378	395	410	410	410	410	-	-	-					343	363	364	342		
350	415	415	430	438	450	465	465	465	-	-	-	-					395	421	422	394		
400	465	465	482	490	505	535	535	535	-	-	-	-	4				447	473	474	446		
50	520	520	532	550	555	560	560	560	-	-	-	-					497	523	524	496		
500	570	570	585	610	615	615	615	615	-	-	-	-					549	575	576	548	27°	3.5
600	670	670	685	725	720	735	735	-	-	-	-	-		5.5	5.0	3.0	649	675	676	648		
700	775	775	800	795	820	840	840	-	-	-	-	-					751	777	778	750		
800	880	880	905	900	930	960	960	-	-	-	-	-					856	882	883	855		
900	980	980	1005	1000	1030	1070	1070	-	-	-	-	-					961	987	988	960		
1000	1080	1080	1110	1115	1140	1180	1180	-	-	-	-	-					1062	1092	1094	1060		
1200	1280	1295	1330	1330	1350	1380	1380	-	-	-	-	-					1262	1292	1294	1260		
1400	1480	1510	1535	1530	1560	1600	-	-	-	-	-	-		6.5	6.0	4.0	1462	1492	1494	1460	28°	4
1600	1690	1710	1760	1750	1780	1815	-	-	-	-	-	-					1662	1692	1694	1660		
1800	1890	1920	1960	1950	1985	-	-	-	-	-	-	-					1862	1892	1894	1860		
2000	2090	2125	2170	2150	2210	-	-	-	-	-	-	-					2062	2092	2094	2060		
2200	2295	2335	2370	-	-	-	-	-	-	-	-	-		-	-	-	-	-	-	-	-	-
2400	2495	2545	2570	-	-	-	-	-	-	-	-	-		-	-	-	-	-	-	-	-	-
2600	2695	2750	2780	-	-	-	-	-	-	-	-	-		-	-	-	-	-	-	-	-	-
2800	2910	2960	3000	-	-	-	-	-	-	-	-	-		-	-	-	-	-	-	-	-	-
3000	3110	3160	3210	-	-	-	-	-	-	-	-	-		-	-	-	-	-	-	-	-	-
3200	3310	3370	-	-	-	-	-	-	-	-	-	-		-	-	-	-	-	-	-	-	-
3400	3510	3580	-	-	-	-	-	-	-	-	-	-		-	-	-	-	-	-	-	-	-
3600	3720	3790	-	-	-	-	-	-	-	-	-	-		-	-	-	-	-	-	-	-	-
3800	3920	-	-	-	-	-	-	-	-	-	-	-		-	-	-	-	-	-	-	-	-
4000	4120	-	-	-	-	-	-	-	-	-	-	-		-	-	-	-	-	-	-	-	-

* Flange facing types C, D, E, F, G and H according to Figure 4 are not used for PN 2,5 and 6.

** Flange facing types G and H according to Figure 4 are only used for PN 10 to PN 40.

Wall thickness and end preparation EN 1092-1

Weld-end preparation for flanges types 11 and 34

Unless otherwise specified, for flanges in accordance with this European Standard the welding end connections given in A1 to A3 shall be used. Additional types of welding ends are specified in EN ISO 9692-2 and example of designs in EN 1708-1 and may be used by agreement between the component or pressure equipment manufacturer and the flange manufacturer.

- Wall thickness $S \leqq 3$ mm: Flanges/collars may be delivered with square cut ends.
- Wall thickness $3 < S < 22$: Bevelled ends with an angle of $30°\ ^{+5°}_{-0}$ and root face of (1,6 ± 0,8) mm.
- If flange wall thickness (S) > pipe wall thickness (T), the inner diameter shall be chamfered with an angle of $15°^{+5°}_{-0}$ to match (see A3).

A1 — Welding end connection for wall thickness S up to 22 mm

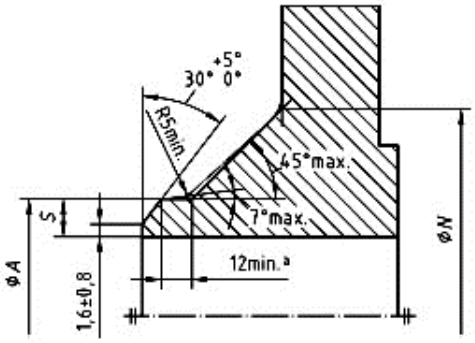

6 min. for ≦ DN200 (H3 length)

A2 — Welding end connection for wall thickness $S \geqq 22$ mm

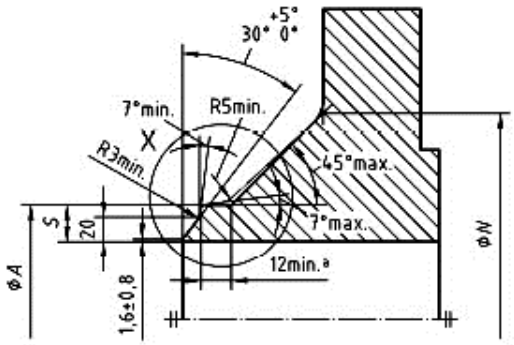

6 min. for ≦ DN200 (H3 length)

X

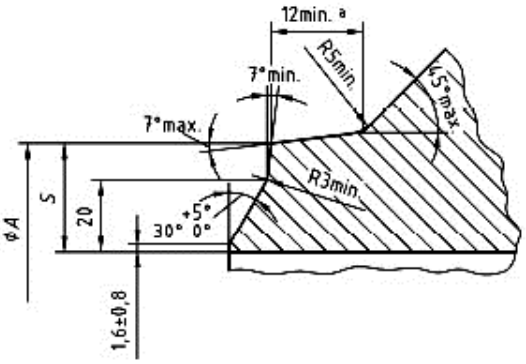

Wall thickness and end preparation EN 1092-1

Weld-end preparation for flanges types 11 and 34

A3 — Permissible bevel design for unequal wall thickness

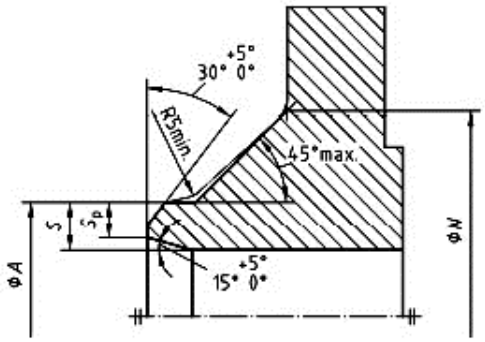

S Flange wall thickness
Sp Reduced flange wall thickness

NOTE 1: For flanges required to connect to non-austenitic steel pipe of nominal wall thickness less than 4,8 mm, the welding ends should be finished to a slight chamfer or be square, at the option of the flange manufacturer, if nothing else has been agreed between flange manufacturer and purchaser or pressure equipment manufacturer.

NOTE 2: For flanges required to connect to austenitic stainless steel pipe of nominal wall thickness 3,2 mm or less, the welding ends should be square cut ends.

NOTE 3: The mating wall thickness of the flange (*Sp*) shall match to the pipe wall thickness (*T*).

Wall thickness and end preparation EN 1092-1

Wall thickness for flange type 11

ψ A	PN2.5		PN6		PN10		PN16		PN25		PN40		PN63		PN100	
	S	*Sp*	*S*	*Sp*	*S*	*Sp*	*S*	*Sp*	*S*	*Sp*	*S*	*Sp*	*S*	*Sp*	*S*	*Sp*
17.2	2	2	2	2	2	2	2	2	2	2	2	2	2	2	2	2
21.3	2	2	2	2	2	2	2	2	2	2	2	2	2	2	3.2	2
26.9	2.3	2.3	2.3	2.3	2.3	2.3	2.3	2.3	2.3	2.3	2.3	2.3	2.6	2.3	3.2	2.3
33.7	2.6	2.6	2.6	2.6	2.6	2.6	2.6	2.6	2.6	2.6	2.6	2.6	2.6	2.6	3.6	2.6
42.4	2.6	2.6	2.6	2.6	2.6	2.6	2.6	2.6	2.6	2.6	2.6	2.6	2.9	2.6	3.6	2.9
48.3	2.6	2.6	2.6	2.6	2.6	2.6	2.6	2.6	2.6	2.6	2.6	2.6	2.9	2.9	3.6	3.2
60.3	2.9	2.9	2.9	2.9	2.9	2.9	2.9	2.9	2.9	2.9	2.9	2.9	4	3.2	4	3.6
76.1	2.9	2.9	2.9	2.9	2.9	2.9	2.9	2.9	2.9	2.9	2.9	2.9	4	3.6	4	4
88.9	3.2	3.2	3.2	3.2	3.2	3.2	3.2	3.2	3.2	3.2	3.2	3.2	4.5	4	5	5
114.3	3.6	3.6	3.6	3.6	3.6	3.6	3.6	3.6	3.6	3.6	3.6	3.6	4.5	4.5	5.6	5.6
139.7	4	4	4	4	4	4	4	4	4	4	4	4	5.6	5.6	6.3	6.3
168.3	4.5	4.5	4.5	4.5	4.5	4.5	4.5	4.5	4.5	4.5	4.5	4.5	6.3	6.3	8	8
219.1	6.3	6.3	6.3	6.3	6.3	6.3	6.3	6.3	6.3	6.3	6.3	6.3	7.1	7.1	8.8	8.8
273.0	6.3	6.3	6.3	6.3	6.3	6.3	6.3	6.3	7.1	7.1	7.1	7.1	8.8	8.8	10	10
323.9	7.1	7.1	7.1	7.1	7.1	7.1	7.1	7.1	8	8	8	8	11	10	12.5	12.5
355.6	7.1	7.1	7.1	7.1	7.1	7.1	8	8	8	8	8.8	8.8	12.5	10	14.2	14.2
406.4	7.1	7.1	7.1	7.1	7.1	7.1	8	8	8.8	8.8	11	11	14.2	11	16	16
457	7.1	7.1	7.1	7.1	7.1	7.1	8	8	8.8	8.8	12.5	12.5				
508	7.1	7.1	7.1	7.1	7.1	7.1	8	8	10	10	14.2	14.2				
610	7.1	7.1	7.1	7.1	8	7.1	10	8.8	11	11	16	16				
711	7.1	7.1	8	7.1	8.8	8	10	8.8	14.2	12.5						
813	7.1	7.1	8	7.1	8.8	8	12.5	10	16	14.2						
914	7.1	7.1	8	7.1	12.5	10	12.5	10	17.5	16						
1016	7.1	7.1	8	7.1	12.5	10	12.5	10	20	17.5						
1219	8	7.1	8.8	8	12.5	11	14.2	12.5								
1422	8	7.1	8.8	8	14.2	12.5	16	14.2								
1626	8.8	8	10	9	16	14.2	17.5	16								
1829	10	10	11	10	17.5	16	20	17.5								
2032	11	10	12.5	11	17.5	16	22	20								
2235	11	10	14	12.5	20	18										
2438	11	10	15	14.2	22.2	20										
2620	11	10	16	14.2	25	22.2										
2820	11	10	17	16	25	22.2										
3020	11	10	20	16	32	24										
3220	11	10	20	16												
3420	11	10	22	17.5												
3620	11	10	22	17.5												
3820	11	10														
4020	11	10														

Sp Valves shall match those given in EN 10220 respectively EN ISO 1127.

Wall thickness and end preparation EN 1092-1

Wall-end preparation for type 35

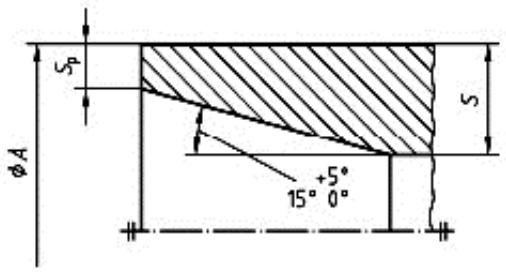

Chamfer A

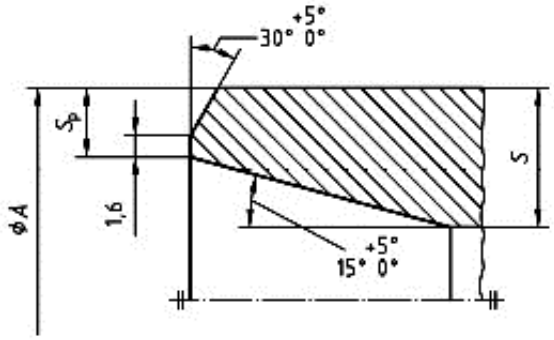

Chamfer B

Wall thickness for flange type 35

ϕ A	PN2.5		PN6		PN10		PN16		PN25		PN40		Chamfer
	S	*Sp*	*S*	*Sp*	*S*	*Sp*	*S*	*Sp*	*S*	*Sp*	*S*	*Sp*	
17.2	3	2	3	2	3	2	3	2	3	2	3	2	
21.3	3	2	3	2	3	2	3	2	3	2	3	2	
26.9	3	2	3	2	3	2	3	2	3	2	3	2	
33.7	3	2	3	2	3	2	3	2	3	2	3	2	
42.4	3	2	3	2	3	2	3	2	3	2	3	2	
48.3	3	2	3	2	3	2	3	2	3	2	3	2	A
60.3	3	2	3	2	3	2	3	2	4	2.6	4	2.6	
76.1	4	2	4	2	4	2	4	2	5	2.6	5	2.6	
88.9	4	2	4	2	4	2	4	2	6	2.6	6	2.6	
114.3	4	2	4	2	4	2	4	2	6	3.2	6	3.2	
139.7	5	2	5	2	5	2	5	2	6	3.2	6	3.2	
168.3	6	2	6	2	6	2	6	2	8	3.2	8	4	
219.1	6	2.6	6	2.6	6	2.6	6	2.6	8	3.2	10	5	
273	8	3.2	8	3.2	8	3.2	8	3.2	10	5	12	6.3	
323.9	8	3.2	8	3.2	8	3.2	10	4	10	6.3	12	8	
355.6	8	3.2	8	3.2	8	3.2	10	4	12	6.3	14	8	
406.4	8	3.2	8	3.2	8	3.2	12	5	14	8	16	10	
457	8	3.6	8	3.6	8	3.6	12	5	15	8			B
508	8	4	8	4	8	4	12	6.3	16	10			
610	8	5	8	5	10	5	12	8	18	10			
711	8	5	8	5	10	6.3	14	8	20	14.2			
813	10	6.3	10	6.3	12	6.3	16	10	20	14.2			
914	10	6.3	10	6.3	12	8	18	10					
1016	12	8	12	8	12	8	18	10					
1219	14	10	14	10	16	10							

Wall thickness and end preparation EN 1092-1

Wall-end preparation for types 36 and 37

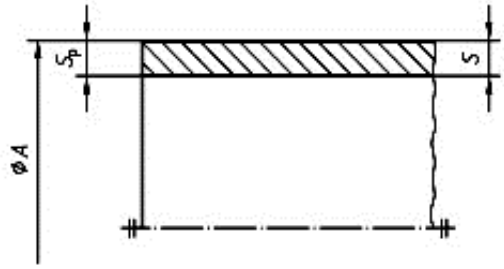

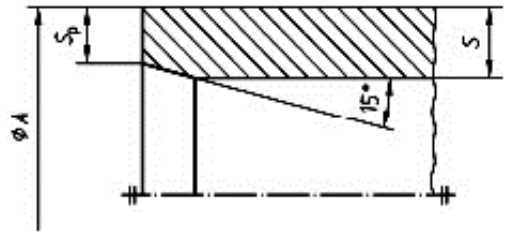

Tolerance of angle: $^{+5°}_{-0°}$

Chamfer A

Chamfer B

Wall thickness for flange types 36 and 37

ψA	PN2.5 to PN10				PN16				Chamfer
	Type 36		Type 37		Type 36		Type 37		
	S	*Sp*	*S*	*Sp*	*S*	*Sp*	*S*	*Sp*	
17.2	2	2	2	2	2	2	2	2	A
21.3	2	2	2	2	2	2	2	2	
26.9	2.6	2.6	2	2	2.6	2.6	2	2	
33.7	2.6	2.6	2	2	2.6	2.6	2	2	
42.4	3.2	3.2	2	2	3.2	3.2	2	2	
48.3	3.2	3.2	2	2	3.2	3.2	2	2	
60.3	3.2	3.2	2	2	3.2	3.2	2	2	
76.1	3.2	3.2	2	2	3.2	3.2	2	2	
88.9	3.2	3.2	2	2	3.2	3.2	3.2	3.2	
114.3	3.2	3.2	3.2	3.2	3.2	3.2	3.2	3.2	
139.7	4	3.2	3.2	3.2	4	3.2	3.5	3.2	
168.3	5	3.2	3.5	3.2	5	3.2	4.5	3.2	
219.1	5	3.2	4.5	3.2	6	3.2	5.6	3.2	
273	8	3.2			10	3.2			
323.9	8	3.2			10	4**			
355.6	8	3.2			10	4**			
406.4	8	3.2			10	4**			
457	8*	3.2*							
508*	8*	3.2*							

*These values are valid only for PN 2,5 and PN 6.

** Like chamfer B for Type 35.

EN 1092-1 PN2.5 Flanges

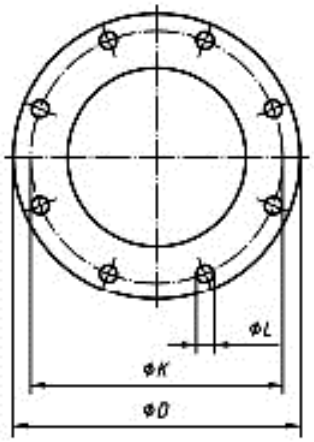

Type 01

Type 05

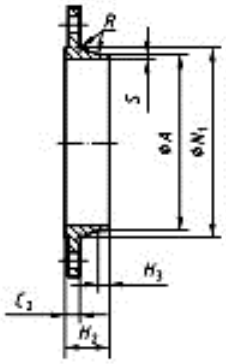

Type 11

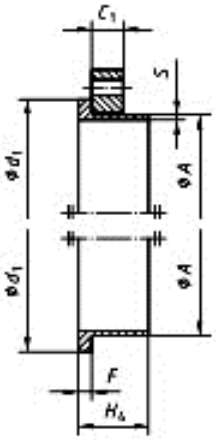

Type 02 and 35

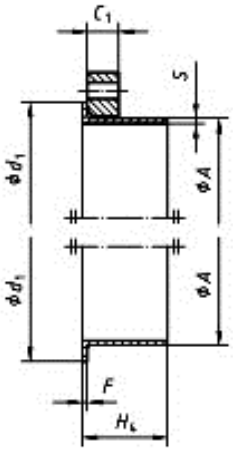

Type 02 and 36

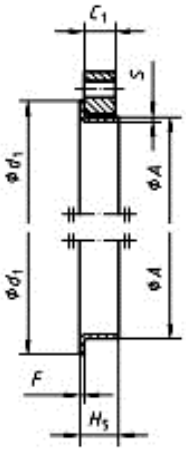

Type 02 and 37

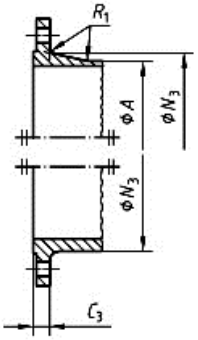

Type 21

Flange type (typ) as in EN 1092-1	
01 (Plate [slip-on] flanges for welding)	21 (Integral flanges)
02 (Loose plate flanges with weld-on plate collar)	35 (Weldring neck)
05 (Blank [blind] flanges)	36 (Pressed collar with long neck)
11 (Weld-neck flanges)	37 (Pressed collar)

EN 1092-1 PN2.5 Flanges

DN	Mating dimensions: Outside Diameter	Mating dimensions: Diameter of Bolt Circle	Mating dimensions: Diameter of Bolt Hole	Bolting		Outside Diameter of Neck	Bore Diameter		Flange thickness				Collar thickness				Diameter of Shoulders	Length					Neck diameters		Corner Radius	Wall thickness
	D	K	L	No	Size	A	B1	B2	C1	C2	C3	C4	F				G max	H2	H3	H4		H5	N1	N3	R1	S
	Flange type																									
	01, 02, 05, 11, 21					11 21 35-37	01 32	02	01 02	11 21		05	32	35	36	37	05	11	11	35	36	37	11	21	11 13	11 35 36 37
10	75	50	11	4	M10	17.2	18.0	21	12	12		12	10	5	2.0	2.5	-	28	6	28	35	7	26	20	4	See "Wall thickness and end preparation"
15	80	55	11	4	M10	21.3	22.0	25	12	12		12	10	5	2.0	2.5	-	30	6	30	38	7	30	26	4	
20	90	65	11	4	M10	26.9	27.5	31	14	14		14	10	6	2.5	3.0	-	32	6	32	40	8	38	34	4	
25	100	75	11	4	M10	33.7	34.5	38	14	14		14	10	7	2.5	3.0	-	35	6	35	40	10	42	44	4	
32	120	90	14	4	M12	42.4	43.5	46	16	14		14	10	8	3.0	3.0	-	35	6	35	42	12	55	54	6	
40	130	100	14	4	M12	48.3	49.5	53	16	14		14	10	8	3.0	3.0	-	38	7	38	45	15	62	64	6	
50	140	110	14	4	M12	60.3	61.5	65	16	14		14	12	8	3.0	3.0	-	38	8	38	45	20	74	74	6	
65	160	130	14	4	M12	76.1	77.5	81	16	14		14	12	8	3.0	3.0	55	38	9	38	45	20	88	94	6	
80	190	150	18	4	M16	88.9	90.5	94	18	16		16	12	10	3.0	4.0	70	42	10	42	50	25	102	110	8	
100	210	170	18	4	M16	114.3	116	120	18	16		16	14	10	4.0	4.0	90	45	10	45	52	25	130	130	8	
125	240	200	18	8	M16	139.7	141.5	145	20	18		18	14	10	4.0	4.0	115	48	10	48	55	25	155	160	8	
150	265	225	18	8	M16	168.3	170.5	174	20	18		18	14	10	5.0	4.0	140	48	12	48	55	25	184	182	10	
200	320	280	18	8	M16	219.1	221.5	226	22	20		20	16	11	5.0	5.0	190	55	15	55	62	30	236	238	10	
250	375	335	18	12	M16	273.0	276.5	281	24	22		22	18	12	8.0	-	235	60	15	60	68	-	290	284	12	
300	440	395	22	12	M20	323.9	327.5	333	24	22		22	18	12	8.0	-	285	62	15	62	68	-	342	342	12	
350	490	445	22	12	M20	355.6	359.5	365	26	22		22	18	13	8.0	-	330	62	15	62	68	-	385	392	12	
400	540	495	22	16	M20	406.4	411.0	416	28	22		22	20	14	8.0	-	380	65	15	65	72	-	438	442	12	
450	595	550	22	16	M20	457.0	462.0	467	30	22		24	20	15	8.0	-	425	65	15	65	72	-	492	494	12	
500	645	600	22	20	M20	508.0	513.5	519	30	24		24	22	16	8.0	-	475	68	15	68	75	-	538	544	12	
600	755	705	26	20	M24	610.0	616.5	622	32	30		30	22	16	-	-	575	70	16	70	-	-	640	642	12	
700	860	810	26	24	M24	711.0	**	721	40	30		40	-	16	-	-	670	76	16	70	-	-	740	746	12	
800	975	920	30	24	M27	813.0		824	44	30		44	-	16	-	-	770	76	16	70	-	-	842	850	12	
900	1075	1020	30	24	M27	914.0		926	48	30		48	-	16	-		860	74	16	70	-	-	942	950	12	
1000	1175	1120	30	28	M27	1016		1028	52	30		52	-	18	-	-	960	74	16	70	-	-	1045	1050	16	
1200	1375	1320	30	32	M27	1219		1234	60	32		50	-	20	-	-	1160	94	16	90	-	-	1245	-	16	
1400	1575	1520	30	36	M27	1422		-	-	38		-	-	-	-	-	1346	96	16	-	-	-	1445	-	16	
1600	1790	1730	30	40	M27	1626		-	-	46		-	-	-	-	-	1546	102	20	-	-	-	1645	-	16	
1800	1990	1930	30	44	M27	1829		-	-	46		-	-	-	-	-	1746	110	20	-	-	-	1845	-	16	
2000	2190	2130	30	48	M27	2032		-	-	50		-	-	-	-	-	1950	122	22	-	-	-	2045	-	16	
2200	2405	2340	32	52	M30	2235	-	-	-	56		-	-	-	-	-	-	129	25	-	-	-	2248	-	18	
2400	2605	2540	33	56	M30	2438	-	-	-	62		-	-	-	-	-	-	143	25	-	-	-	2448	-	18	
2600	2805	2740	33	60	M30	2620	-	-	-	64		-	-	-	-	-	-	148	25	-	-	-	2648	-	18	
2800	3030	2960	36	64	M33	2820	-	-	-	74		-	-	-	-	-	-	161	25	-	-	-	2848	-	18	
3000	3230	3160	36	68	M33	3020	-	-	-	80		-	-	-	-	-	-	170	25	-	-	-	3050	-	18	
3200	3430	3360	36	72	M33	3220	-	-	-	84		-	-	-	-	-	-	180	25	-	-	-	3250	-	20	
3400	3630	3560	36	76	M33	3420	-	-	-	90		-	-	-	-	-	-	194	28	-	-	-	3475	-	20	
3600	3840	3770	36	80	M33	3620	-	-	-	96		-	-	-	-	-	-	201	28	-	-	-	3652	-	20	
3800	4045	3970	39*	80	M36	3820	-	-	-	102		-	-	-	-	-	-	212	28	-	-	-	3852	-	20	
4000	4245	4170	39	84	M36	4020	-	-	-	106		-	-	-	-	-	-	226	28	-	-	-	4052	-	20	

Note 1: Dimensions N1 is measured at the intersection of the hub draft angle and the back face of the flange.

Note 2: The centre portion of the face of a flange type 05 need not be machined provided that the diameter of the un-machined portion does not exceed the recommended diameter for G max.

** To be specified by the purchaser.

EN 1092-1 PN6 Flanges

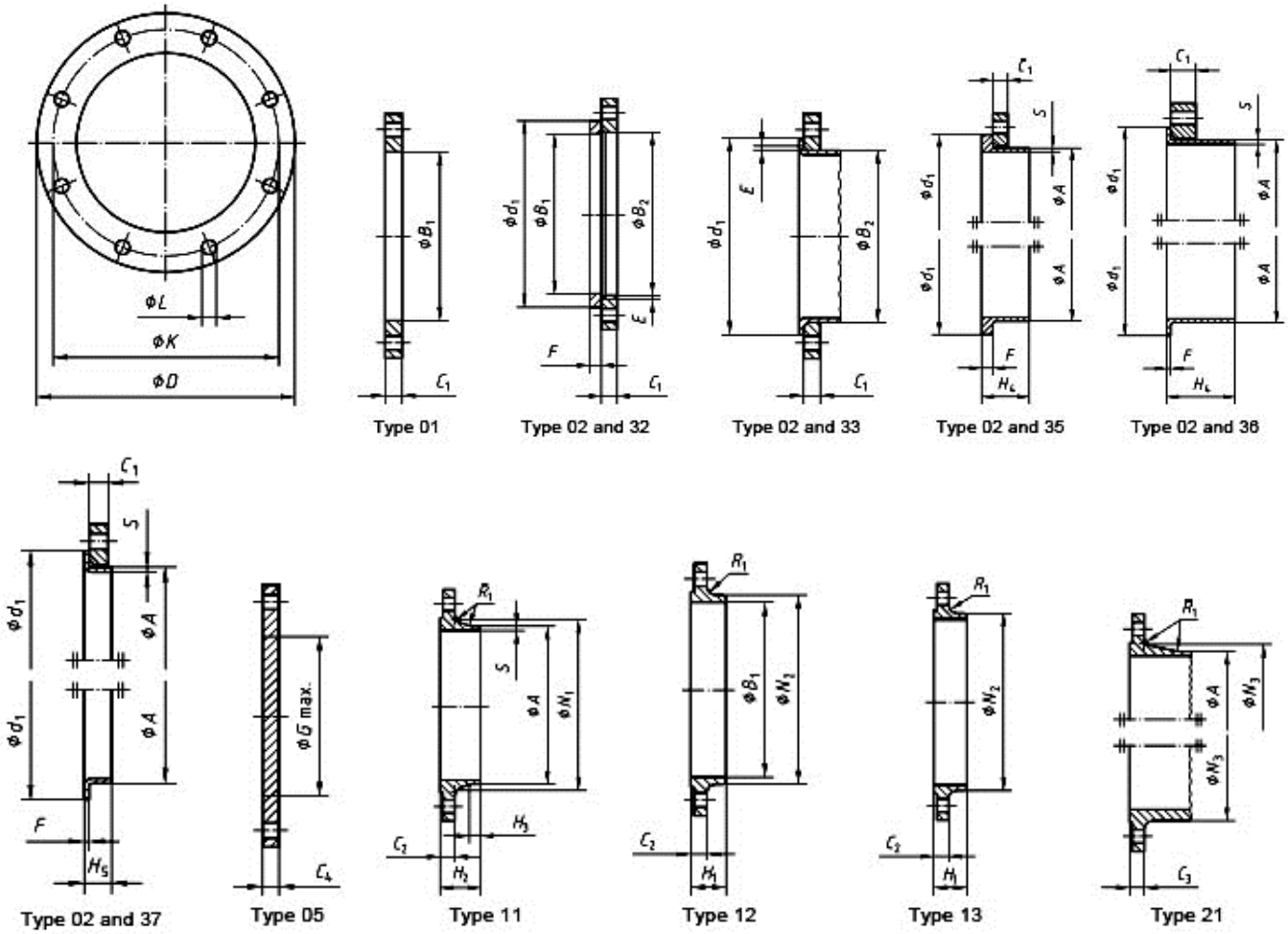

Flange type (typ) as in EN 1092-1	
01 (Plate [slip-on] flanges for welding)	21 (Integral flanges)
02 (Loose plate flanges with weld-on plate collar)	32 (Weld-on plate collars)
05 (Blank [blind] flanges)	33 (Lapped pipe ends without determination of thickness of thickness and height)
11 (Weld-neck flanges)	35 (Weldring neck)
12 (Hubbed slip-on flanges for welding)	36 (Pressed collar with long neck)
13 (Hubbed threaded flanges)	37 (Pressed collar)

EN 1092-1 PN6 Flanges

DN	Mating dimensions					Outside Diameter of Neck	Bore Diameter		Flange thickness			Chamfer	Collar thickness				Diameter of Shoulders	Length						Neck diameters			Corner Radius	Wall thickness
	Outside Diameter	Diameter of Bolt Circle	Diameter of Bolt Hole	Bolting																								
	D	K	L	No	Size	A	B1	B2	C1	C2 C3	C4	E	F				G max	H1	H2	H3	H4	H5		N1	N2	N3	R1	S
	Flange type																											
	01, 02, 05, 11, 12, 13, 21					11 21* 35-37	01 12 32	02	01 02	11 12 13 21	05	02	32	35	36	37	05	12 13	11	11	35	36	37	11	12 13	21	11 12 13 21	11 35 36 37
10	75	50	11	4	M10	17.2	18.0	21	12	12	12	3	10	5	2.0	2.5	-	20	28	6	28	35	7	26	25	20	4	See "Wall thickness and end preparation"
15	80	55	11	4	M10	21.3	22.0	25	12	12	12	3	10	5	2.0	2.5	-	20	30	6	30	38	7	30	30	26	4	
20	90	65	11	4	M10	26.9	27.5	31	14	14	14	4	10	6	2.5	3.0	-	24	32	6	32	40	8	38	40	34	4	
25	100	75	11	4	M10	33.7	34.5	38	14	14	14	4	10	7	2.5	3.0	-	24	35	6	35	40	10	42	50	44	4	
32	120	90	14	4	M12	42.4	43.5	46	16	14	14	5	10	8	3.0	3.0	-	26	35	6	35	42	12	55	60	54	6	
40	130	100	14	4	M12	48.3	49.5	53	16	14	14	5	10	8	3.0	3.0	-	26	38	7	38	45	15	62	70	64	6	
50	140	110	14	4	M12	60.3	61.5	65	16	14	14	5	12	8	3.0	3.0	-	28	38	8	38	45	20	74	80	74	6	
65	160	130	14	4	M12	76.1	77.5	81	16	14	14	6	12	8	3.0	3.0	55	32	38	9	38	45	20	88	100	94	6	
80	190	150	18	4	M16	88.9	90.5	94	18	16	16	6	12	10	3.0	4.0	70	34	42	10	42	50	25	102	110	110	8	
100	210	170	18	4	M16	114.3	116	120	18	16	16	6	14	10	4.0	4.0	90	40	45	10	45	52	25	130	130	130	8	
125	240	200	18	8	M16	139.7	141.5	145	20	18	18	6	14	10	4.0	4.0	115	44	48	10	48	55	25	155	160	160	8	
150	265	225	18	8	M16	168.3	170.5	174	20	18	18	6	14	10	5.0	4.0	140	44	48	12	48	55	25	184	185	182	10	
200	320	280	18	8	M16	219.1	221.5	226	22	20	20	6	16	11	5.0	5.0	190	44	55	15	55	62	30	236	240	238	10	
250	375	335	18	12	M16	273.0	276.5	281	24	22	22	8	18	12	8.0	-	235	44	60	15	60	68	-	290	295	284	12	
300	440	395	22	12	M20	323.9	327.5	333	24	22	22	8	18	12	8.0	-	285	44	62	15	62	68	-	342	355	342	12	
350	490	445	22	12	M20	355.6	359.5	365	26	22	22	8	18	13	8.0	-	330	-	62	15	62	68	-	385	-	392	12	
400	540	495	22	16	M20	406.4	411	416	28	22	22	8	20	14	8.0	-	380	-	65	15	65	72	-	438	-	442	12	
450	595	550	22	16	M20	457.0	462	467	30	22	24	8	20	15	8.0	-	425	-	65	15	72	72	-	492	-	494	12	
500	645	600	22	20	M20	508.0	513.5	519	30	24	24	8	22	16	8.0	-	475	-	68	15	75	75	-	538	-	544	12	
600	755	705	26	20	M24	610.0	616.5	622	32	30	30	8	22	16	-	-	575	-	70	16	70	-	-	640	-	642	12	
700	860	810	26	24	M24	711.0		721	40	30	40	4	-	16	-	-	670	-	76	16	70	-	-	740	-	746	12	
800	975	920	30	24	M27	813.0		824	44	30	44	4	-	16	-	-	770	-	76	16	70	-	-	842	-	850	12	
900	1075	1020	30	24	M27	914.0		926	48	34	48	4	-	16	-		860	-	78	16	70	-	-	942	-	950	12	
1000	1175	1120	30	28	M27	1016.0		1028	52	38	52	4	-	18	-	-	960	-	82	16	70	-	-	1045	-	1050	16	
1200	1405	1340	33	32	M30	1219.0	**	1234	60	42	60	5	-	20	-	-	1160	-	104	20	90	-	-	1248	-	1264	16	
1400	1630	1560	36	36	M33	1422.0		-	42	56	68	-	-	-	-	-	1346	-	114	20	-	-	-	1452	-	1480	16	
1600	1830	1760	36	40	M33	1626.0		-	80	63	76	-	-	-	-	-	1546	-	119	20	-	-	-	1655	-	1680	16	
1800	2045	1970	39	44	M36	1829.0		-	88	69	84	-	-	-	-	-	1746	-	133	20	-	-	-	1855	-	1878	16	
2000	2265	2180	42	48	M39	2032.0		-	96	74	92	-	-	-	-	-	1950	-	146	25	-	-	-	2058	-	2082	16	
2200	2475	2390	42	52	M39	2035.0	-	-	-	81	-	-	-	-	-	-	-	-	154	25	-	-	-	2260	-	-	18	
2400	2685	2600	42	56	M39	2438.0	-	-	-	87	-	-	-	-	-	-	-	-	168	25	-	-	-	2462	-	-	18	
2600	2905	2710	48	60	M45	2620.0	-	-	-	91	-	-	-	-	-	-	-	-	175	25	-	-	-	2665	-	-	18	
2800	3115	3020	48	64	M45	2820.0	-	-	-	101	-	-	-	-	-	-	-	-	188	30	-	-	-	2865	-	-	18	
3000	3315	3220	48	68	M45	3020.0	-	-	-	102	-	-	-	-	-	-	-	-	192	30	-	-	-	3068	-	-	18	
3200	3525	3430	48	72	M45	3220.0	-	-	-	106	-	-	-	-	-	-	-	-	202	30	-	-	-	3272	-	-	20	
3400	3735	3640	48	76	M45	3420.0	-	-	-	110	-	-	-	-	-	-	-	-	214	35	-	-	-	3475	-	-	20	
3600	3970	3860	56	80	M52	3620.0	-	-	-	124	-	-	-	-	-	-	-	-	229	35	-	-	-	3678	-	-	20	

* For flanges type 21 the outside hub diameter approximately corresponds to the outside pipe diameter.

** To be specified by the purchaser.

Note 1: Dimensions N1, N2 and N3 are measured at the intersection of the hub draft angle and the back face of the flange.

Note 2:The centre portion of the face of a flange type 05 need not be machined provided that the diameter of the un-machined portion does not exceed the recommended diameter for G max.

Note 3: For d1 dimensions see document "Flange Facing Dimensions EN 1092-1"

Note 4: Type 33; lapped pipe end without determination of thickness and height.

EN 1092-1 PN10 Flanges

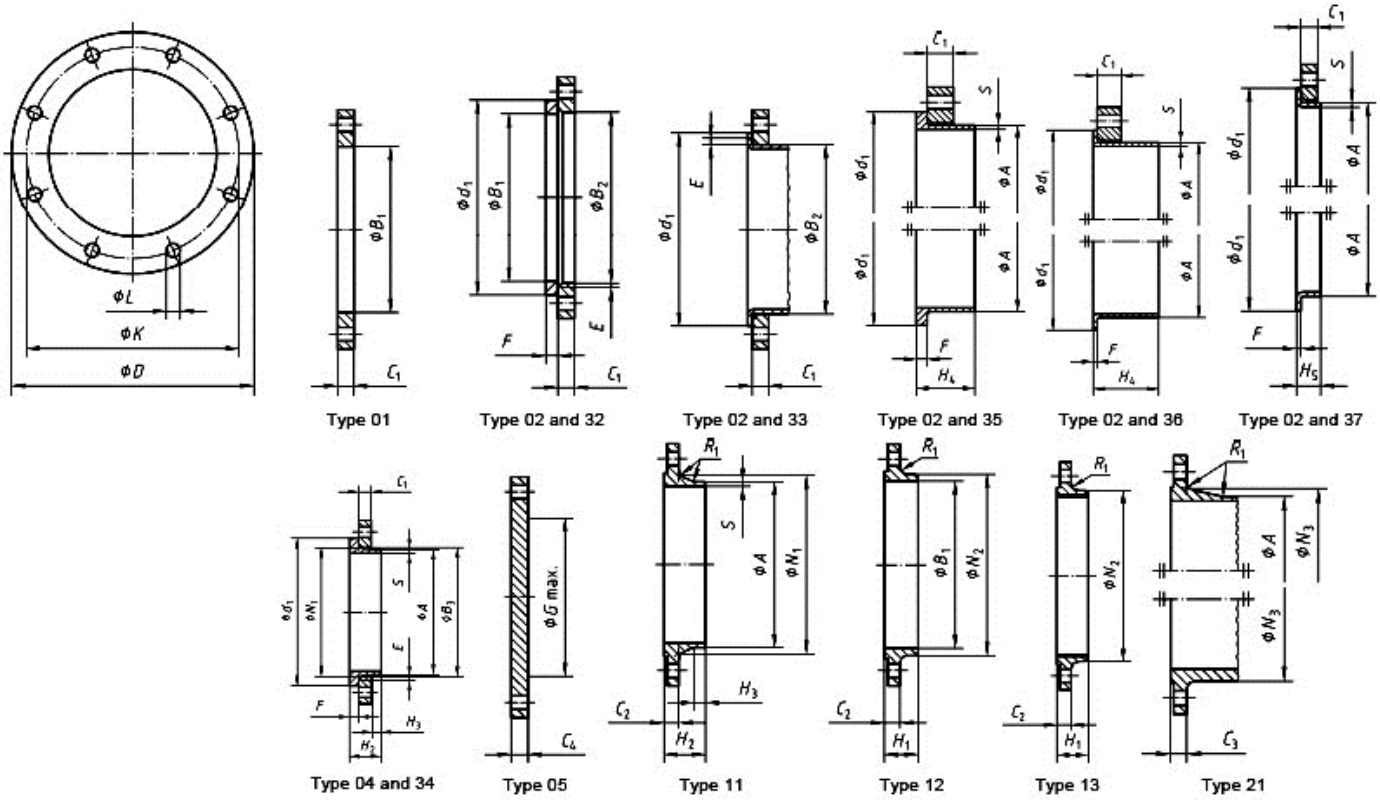

Flange type (typ) as in EN 1092-1	
01 (Plate [slip-on] flanges for welding)	21 (Integral flanges)
02 (Loose plate flanges with weld-on plate collar)	32 (Weld-on plate collars)
04 (Loose plate flanges with weld-neck collar)	33 (Lapped pipe ends without determination of thickness and height)
05 (Blank [blind] flanges)	35 (Weld-neck collars)
11 (Weld-neck flanges)	36 (Pressed collar with long neck)
12 (Hubbed slip-on flanges for welding)	37 (Pressed collar)
13 (Hubbed threaded flanges)	

EN 1092-1 PN10 Flanges

DN	Mating dimensions: Outside Diameter	Mating dimensions: Diameter of Bolt Circle	Mating dimensions: Diameter of Bolt Hole	Mating dimensions: Bolting		Outside Diameter of Neck	Bore Diameter			Flange thickness				Chamfer	Collar thickness				Diameter of Shoulders	Length						Neck diameters			Corner Radius	Wall thickness	
	D	K	L	No	Size	A	B1	B2	B3	C1	C2	C3	C4	E	F				G max	H1	H2	H3	H4		H5	N1	N2	N3	R1	S	
	Flange type																															
	01, 02, 04, 05, 11, 12, 13, 21					11 21*** 34* 35-37	01 12 32	02	04	01 02 04	11 12 13	21	05	02 04	32 34	35	36	37	05	12 13	11 34*	11 34*	35	36	37	11 34*	12 13	21	11 12 13 21 34	34	11 35 36 37
10	90	60	14	4	M12	17.2	18.0	21	31	14	16	16	16	3	12	5	2.0	2.5	-	22	35	6	35	35	7	28	30	28	4	1.8	See “Wall thickness and end preparation”
15	95	65	14	4	M12	21.3	22.0	25	35	14	16	16	16	3	12	5	2.0	2.5	-	22	38	6	38	38	7	32	35	32	4	2.0	
20	105	75	14	4	M12	26.9	27.5	31	42	16	18	18	18	4	14	6	2.5	3.0	-	26	40	6	40	40	8	40	45	40	4	2.3	
25	115	85	14	4	M12	33.7	34.5	38	49	16	18	18	18	4	14	7	2.5	3.0	-	28	40	6	40	40	10	46	52	50	4	2.6	
32	140	100	18	4	M16	42.4	43.5	47	59	18	18	18	18	5	14	8	3.0	3.0	-	30	42	6	42	42	12	56	60	60	6	2.6	
40	150	110	18	4	M16	48.3	49.5	53	67	18	18	18	18	5	14	8	3.0	3.0	-	32	45	7	45	45	15	64	70	70	6	2.6	
50	165	125	18	4	M16	60.3	61.5	65	77	20	18	18	18	5	16	8	3.0	4.0	-	28	45	8	45	45	20	74	84	84	6	2.9	
65	185	145	18	8	M16	76.1	77.5	81	96	20	18	18	18	6	16	8	3.0	4.0	55	32	45	10	45	45	20	92	104	104	6	2.9	
80	200	160	18	8	M16	88.9	90.5	94	108	20	20	20	20	6	16	10	3.0	4.0	70	34	50	10	50	50	25	105	118	120	6	3.2	
100	220	180	18	8	M16	114.3	116.0	120	134	22	20	20	20	6	18	10	4.0	4.0	90	40	52	12	52	52	25	131	140	140	8	3.6	
125	250	210	18	8	M16	139.7	141.5	145	162	22	22	22	22	6	18	10	4.0	4.0	115	44	55	12	55	55	25	156	168	170	8	4.0	
150	285	240	22	8	M20	168.3	170.5	174	188	24	22	22	22	6	20	10	4.0	4.0	140	44	55	12	55	55	25	184	195	190	10	4.5	
200	340	295	22	8	M20	219.1	221.5	226	240	24	24	24	24	6	20	11	5.0	5.0	190	44	62	16	62	62	30	234	246	246	10	6.3	
250	395	350	22	12	M20	273.0	276.5	281	294	26	26	26	26	8	22	12	8.0	-	235	46	68	16	68	68	-	292	298	298	12	6.3	
300	445	400	22	12	M20	323.9	327.5	333	348	26	26	26	26	8	22	12	8.0	-	285	46	68	16	68	68	-	342	350	348	12	7.1	
350	505	460	22	16	M20	355.6	359.5	365	400	30	26	26	26	8	22	13	8.0	-	330	53	68	16	68	68	-	385	400	408	12	7.1	
400	565	515	26	16	M24	406.4	411.0	416	450	32	26	26	26	8	24	14	8.0	-	380	57	72	16	72	72	-	440	456	456	12	7.1	
450	615	565	26	20	M24	457.0	462.0	467	498	36	28	28	28	8	24	15	-	-	425	63	72	16	72	-	-	488	502	502	12	7.1	
500	670	620	26	20	M24	508.0	513.5	519	550	38	28	28	28	8	26	16	-	-	475	67	75	16	75	-	-	542	559	559	12	7.1	
600	780	725	30	20	M27	610.0	616.5	622	650	42	30	34	34	8	26	18	-	-	575	75	82	18	80	-	-	642	658	658	12	-	
700	895	840	30	24	M27	711.0		721	-	50	35		38	8	-	20	-	-	670	-	85	18	80	-	-	746	-	772	12	-	
800	1015	950	33	24	M30	813.0		824	-	56	38		48	8	-	20	-	-	770	-	96	18	90	-	-	850	-	876	12	-	
900	1115	1050	33	28	M30	914.0	**	926	-	62	38		50	8	-	22	-	-	860	-	99	20	95	-	-	950	-	976	12	-	
1000	1230	1160	36	28	M33	1016		1028	-	70	44	**	54	8	-	24	-	-	960	-	105	20	95	-	-	1052	-	1080	16	-	
1200	1455	1380	39	32	M36	1219		1234	-	83	55		66	8	-	26	-	-	1160	-	132	25	115	-	-	1256	-	1292	16	-	
1400	1675	1590	42	36	M39	1422	-	-	-		65		-	-	-	-	-	-	-	-	143	25	-	-	-	1460	-	1496	16	-	
1600	1915	1820	48	40	M45	1626	-	-	-		75		-	-	-	-	-	-	-	-	159	25	-	-	-	1666	-	1712	16	-	
1800	2115	2020	48	44	M45	1829	-	-	-		85		-	-	-	-	-	-	-	-	175	30	-	-	-	1868	-	1910	16	-	
2000	2325	2230	48	48	M45	2032	-	-	-		90	-	-	-	-	-	-	-	-	-	186	30	-	-	-	2072	-	2120	16	-	
2200	2550	2440	56	52	M52	2235	-	-		**	100	-	-	-	-	-	-	-	-	-	202	35	-	-	-	2275	-	-	18	-	
2400	2760	2650	56	56	M52	2438	-	-	-		110	-	-	-	-	-	-	-	-	-	218	35	-	-	-	2478	-	-	18	-	
2600	2960	2850	56	60	M52	2620	-	-	-		110	-	-	-	-	-	-	-	-	-	224	40	-	-	-	2680	-	-	18	-	
2800	3180	3070	56	64	M52	2820	-	-	-		124	-	-	-	-	-	-	-	-	-	244	40	-	-	-	2882	-	-	18	-	
3000	3405	3290	62	68	M56	3020	-	-			132	-	-	-	-	-	-	-	-	-	257	45	-	-	-	3085	-	-	18	-	

* Use is limited up to DN600.

** To be specified by the purchaser.

*** For flanges type 21 the outside hub diameter approximately corresponds to the outside pipe diameter.

Note 1: Dimensions N1, N2 and N3 are measured at the intersection of the hub draft angle and the back face of the flange.

Note 2:The centre portion of the face of a flange type 05 need not be machined provided that the diameter of the un-machined portion does not exceed the recommended diameter for G max.

Note 3: For d1 dimensions see document "Flange Facing Dimensions EN 1092-1".

Note 4: Type 33; lapped pipe end without determination of thickness and height.

EN 1092-1 PN16 Flanges

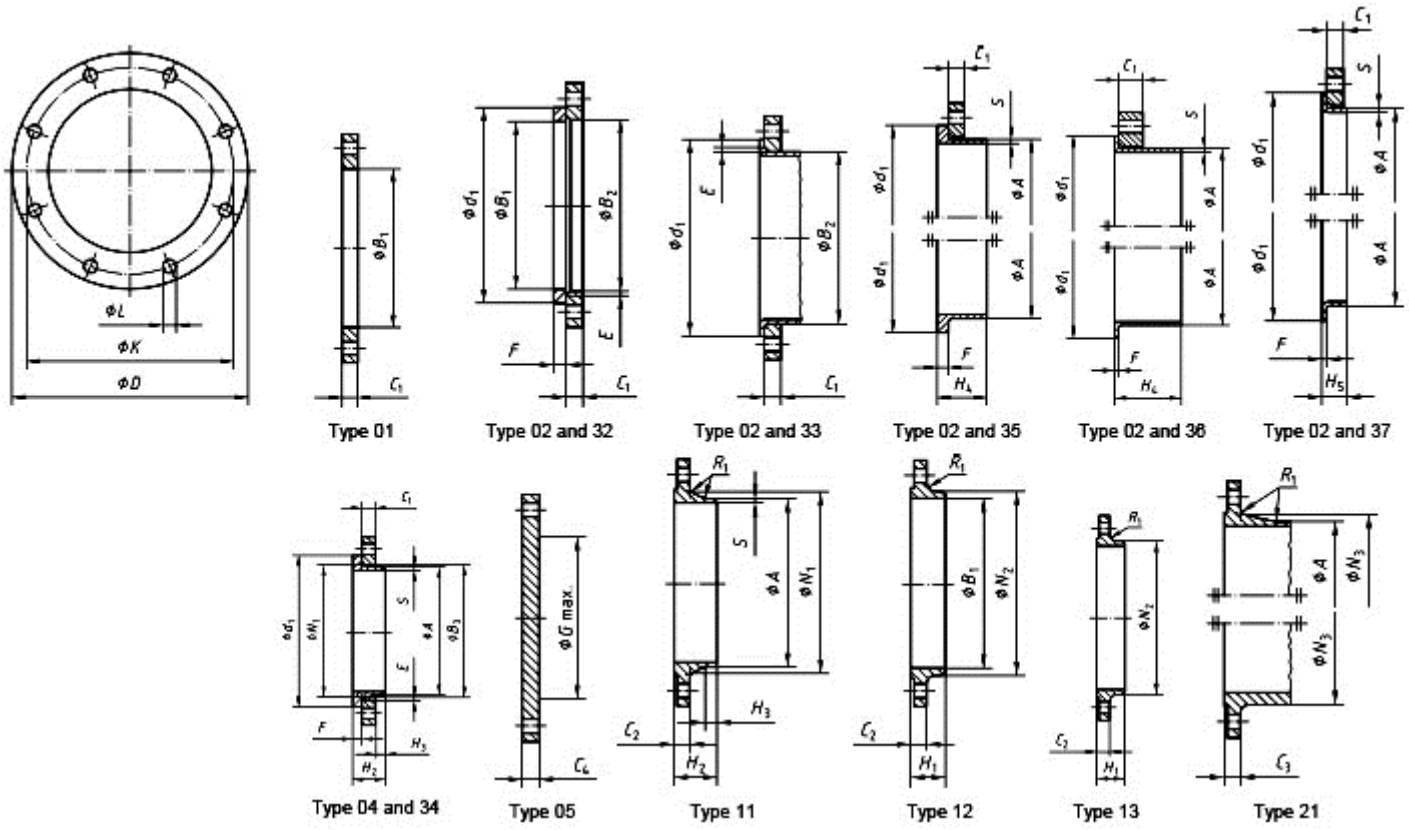

Flange type (typ) as in EN 1092-1	
01 (Plate [slip-on] flanges for welding)	21 (Integral flanges)
02 (Loose plate flanges with weld-on plate collar)	32 (Weld-on plate collars)
04 (Loose plate flanges with weld-neck collar)	33 (Lapped pipe ends without determination of thickness and height)
05 (Blank [blind] flanges)	34 (Weld-neck collars)
11 (Weld-neck flanges)	35 (Weldring neck)
12 (Hubbed slip-on flanges for welding)	36 (Pressed collar with long neck)
13 (Hubbed threaded flanges)	37 (Pressed collar)

EN 1092-1 PN16 Flanges

DN	Mating dimensions: Outside Diameter	Mating dimensions: Diameter of Bolt Circle	Mating dimensions: Diameter of Bolt Hole	Mating dimensions: Bolting		Outside Diameter of Neck	Bore Diameter			Flange thickness				Chamfer	Collar thickness				Diameter of Shoulders	Length						Neck diameters			Corner Radius	Wall thickness	
	D	K	L	No	Size	A	B1	B2	B3	C1	C2	C3	C4	E	F				G max	H1	H2	H3	H4		H5	N1	N2	N3	R1	S	
	Flange type																															
	01, 02, 04, 05, 11, 12, 13, 21					11 21*** 34* 35-37	01 12 32	02	04	01 02 04	11 12 13	21	05	02 04	32 34	35	36	37	05	12 13	11 34**	11 34**	35	36	37	11 34**	12 13	21	11 12 13 21 34	34	11 35 36 37
10	90	60	14	4	M12	17.2	18.0	21	31	14	16	16	16	3	12	5	2.0	2.5	-	22	35	6	35	35	7	28	30	28	4	1.8	See "Wall thickness and end preparation"
15	95	65	14	4	M12	21.3	22.0	25	35	14	16	16	16	3	12	5	2.0	2.5	-	22	38	6	38	38	7	32	35	32	4	2.0	
20	105	75	14	4	M12	26.9	27.5	31	42	16	18	18	18	4	14	6	2.5	3.0	-	26	40	6	40	40	8	40	45	40	4	2.3	
25	115	85	14	4	M12	33.7	34.5	38	49	16	18	18	18	4	14	7	2.5	3.0	-	28	40	6	40	40	10	46	52	50	4	2.6	
32	140	100	18	4	M16	42.4	43.5	47	59	18	18	18	18	5	14	8	3.0	3.0	-	30	42	6	42	42	12	56	60	60	6	2.6	
40	150	110	18	4	M16	48.3	49.5	53	67	18	18	18	18	5	14	8	3.0	3.0	-	32	45	7	45	45	15	64	70	70	6	2.6	
50	165	125	18	4	M16	60.3	61.5	65	77	20	18	18	18	5	16	8	3.0	4.0	-	28	45	8	45	45	20	74	84	84	6	2.9	
65	185	145	18	8 a	M16	76.1	77.5	81	96	20	18	18	18	6	16	8	3.0	4.0	55	32	45	10	45	45	20	92	104	104	6	2.9	
80	200	160	18	8	M16	88.9	90.5	94	108	20	20	20	20	6	16	10	3.0	4.0	70	34	50	10	50	50	25	105	118	120	6	3.2	
100	220	180	18	8	M16	114.3	116.0	120	134	22	20	20	20	6	18	10	4.0	4.0	90	40	52	12	52	52	25	131	140	140	8	3.6	
125	250	210	18	8	M16	139.7	141.5	145	162	22	22	22	22	6	18	10	4.0	4.0	115	44	55	12	55	55	25	156	168	170	8	4.0	
150	285	240	22	8	M20	168.3	170.5	174	188	24	22	22	22	6	20	10	5.0	5.0	140	44	55	12	55	55	25	184	195	190	10	4.5	
200	340	295	22	12	M20	219.1	221.5	226	240	26	24	24	24	6	20	11	6.0	6.0	190	44	62	16	62	62	30	235	246	246	10	6.3	
250	405	355	26	12	M24	273.0	276.5	281	294	29	26	26	26	8	22	12	10.0	-	235	46	70	16	70	68	-	292	298	296	12	6.3	
300	460	410	26	12	M24	323.9	327.5	333	348	32	28	28	28	8	24	14	10.0	-	285	46	78	16	78	68	-	344	350	350	12	7.1	
350	520	470	26	16	M24	355.6	359.5	365	400	35	30	30	30	8	26	18	10.0	-	330	57	82	16	82	68	-	390	400	410	12	8.0	
400	580	525	30	16	M27	406.4	411.0	416	454	38	32	32	32	8	28	20	10.0	-	380	63	85	16	85	72	-	445	456	458	12	8.0	
450	640	585	30	20	M27	457.0	462.0	467	500	42	34	40	40	8	30	22	-	-	425	68	83	16	87	-	-	490	502	516	12	8.0	
500	715	650	33	20	M30	508.0	513.5	519	556	46	36	44	44	8	32	22	-	-	475	73	84	16	90	-	-	548	559	576	12	8.0	
600	840	770	36	20	M33	610.0	616.5	622	660	55	40	54	54	8	32	24	-	-	575	83	88	18	95	-	-	670	658	690	12	8.8	
700	910	840	36	24	M33	711.0	**	721	-	63	40	**	58	8	-	26	-	-	670	83	104	18	100	-	-	755	760	760	12	-	
800	1025	950	39	24	M36	813.0		824	-	74	41		62	8	-	28	-	-	770	90	108	20	105	-	-	855	864	862	12	-	
900	1125	1050	39	28	M36	914.0		926	-	82	48		64	8	-	30	-	-	860	94	118	20	110	-	-	955	968	962	12	-	
1000	1255	1170	42	28	M39	1016		1030	-	90	59		68	8	-	35	-	-	960	100	137	22	120	-	-	1058	1072	1076	16	-	
1200	1485	1390	48	32	M45	1219	-	-	-	**	78		-	-	-	-	-	-	1160	-	160	30	-	-	-	1262	-	1282	16	-	
1400	1685	1590	48	36	M45	1422	-	-	-		84		-	-	-	-	-	-	1346	-	177	30	-	-	-	1465	-	1482	16	-	
1600	1930	1820	56	40	M52	1626	-	-	-		102		-	-	-	-	-	-	1546	-	204	35	-	-	-	1668	-	1696	16	-	
1800	2130	2020	56	44	M52	1829	-	-	-		110		-	-	-	-	-	-	1746	-	218	35	-	-	-	1870	-	1896	16	-	
2000	2345	2230	62	48	M56	2032	-	-	-		124		-	-	-	-	-	-	1950	-	238	40	-	-	-	2072	-	2100	16	-	

(a) According to EN 1092-2 (Cast Iron Flanges) and EN1092-3 (Copper Alloy Flanges), the flanges in this DN and PN may be supplied with 4 holes. Where steel flanges are required with 4 holes, these may be supplied by agreement between flange manufacturer and purchaser.

* Use is limited up to DN600.

** To be specified by the purchaser.

*** For flanges type 21 the outside hub diameter approximately corresponds to the outside pipe diameter.

Note 1: Dimensions N1, N2 and N3 are measured at the intersection of the hub draft angle and the back face of the flange.

Note 2: The centre portion of the face of a flange type 05 need not be machined provided that the diameter of the un-machined portion does not exceed the recommended diameter for G max.

Note 3: For d1 dimensions see document "Flange Facing Dimensions EN 1092-1".

Note 4: Type 33; lapped pipe end without determination of thickness and height.

EN 1092-1 PN25 Flanges

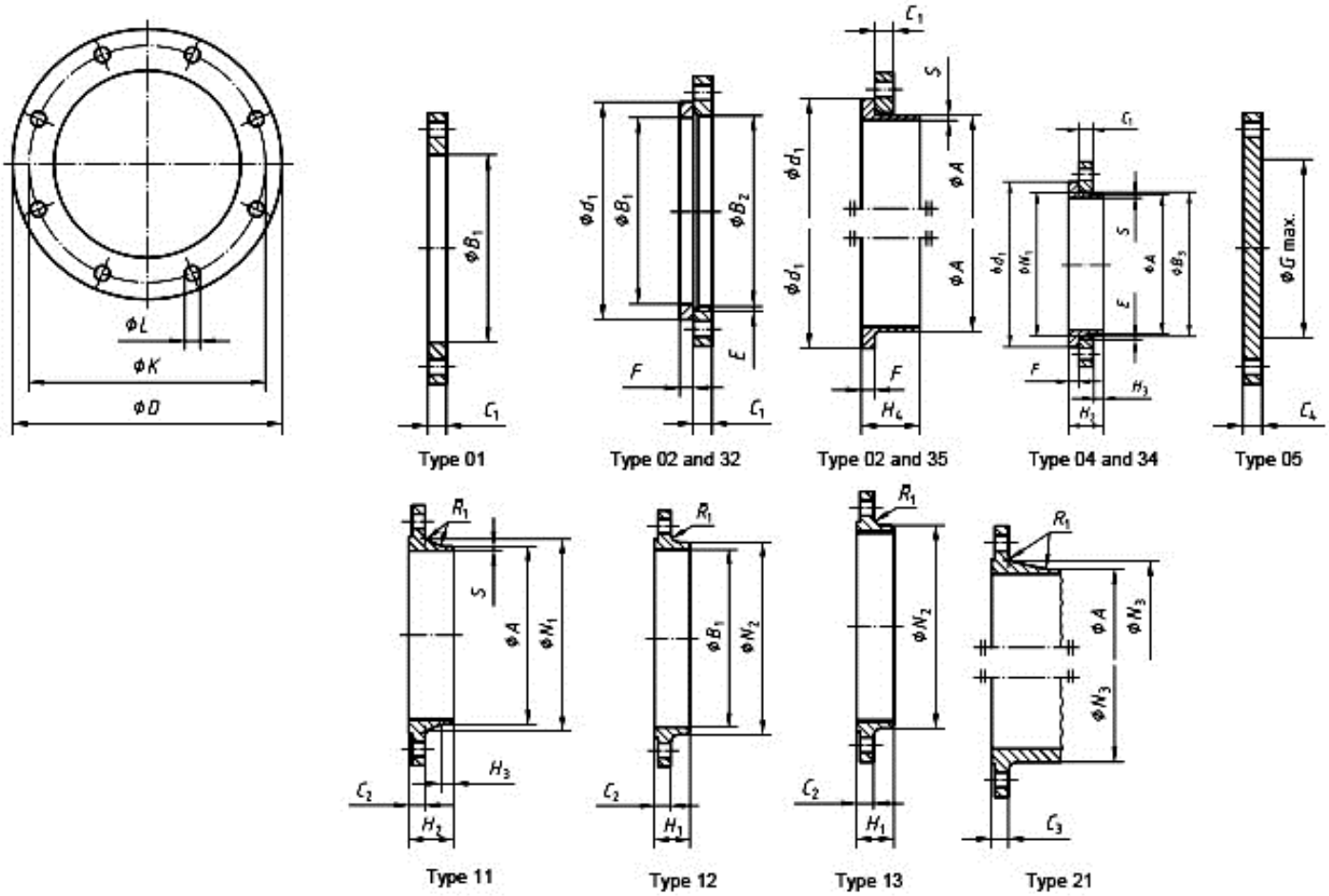

Flange type (typ) as in EN 1092-1	
01 (Plate [slip-on] flanges for welding)	13 (Hubbed threaded flanges)
02 (Loose plate flanges with weld-on plate collar)	21 (Integral flanges)
04 (Loose plate flanges with weld-neck collar)	32 (Weld-on plate collars)
05 (Blank [blind] flanges)	34 (Weld-neck collars)
11 (Weld-neck flanges)	35 (Weldring neck)
12 (Hubbed slip-on flanges for welding)	

EN 1092-1 PN25 Flanges

DN	Mating dimensions					Outside Diameter of Neck	Bore Diameter			Flange thickness				Chamfer	Collar thickness		Diameter of Shoulders	Length				Neck diameters			Corner Radius	Wall thickness	
	Outside Diameter	Diameter of Bolt Circle	Diameter of Bolt Hole	Bolting																							
	D	K	L	No	Size	A	B1	B2	B3	C1	C2	C3	C4	E	F		G max	H1	H2	H3	H4	N1	N2	N3	R1	S	
	Flange type																										
	01, 02, 04, 05, 11, 12, 13, 21					11 21*** 34* 35	01 12 32	02	04	01 02 04	11 12 13	21	05	02 04	32 34	35	05	12 13	11 34*	11 34*	35	11 34	12 13	21	11 12 13 21 34	34	11 35
10	90	60	14	4	M12	17.2	18.0	21	31	14	16	16	16	3	12	5	-	22	35	6	35	28	30	28	4	1.8	See t "Wall thickness and end preparation"
15	95	65	14	4	M12	21.3	22.0	25	35	14	16	16	16	3	12	5	-	22	38	6	38	32	35	32	4	2.0	
20	105	75	14	4	M12	26.9	27.5	31	42	16	18	18	18	4	14	6	-	26	40	6	40	40	45	40	4	2.3	
25	115	85	14	4	M12	33.7	34.5	38	49	16	18	18	18	4	14	7	-	28	40	6	40	46	52	50	4	2.6	
32	140	100	18	4	M16	42.4	43.5	47	59	18	18	18	18	5	14	8	-	30	42	6	42	56	60	60	6	2.6	
40	150	110	18	4	M16	48.3	49.5	53	67	18	18	18	18	5	14	8	-	32	45	7	45	64	70	70	6	2.6	
50	165	125	18	4	M16	60.3	61.5	65	77	20	20	20	20	5	16	10	-	34	48	8	48	75	84	84	6	2.9	
65	185	145	18	8	M16	76.1	77.5	81	96	22	22	22	22	6	16	11	55	38	52	10	52	90	104	104	6	2.9	
80	200	160	18	8	M16	88.9	90.5	94	114	24	24	24	24	6	18	12	70	40	58	12	58	105	118	120	8	3.2	
100	235	190	22	8	M20	114.3	116.0	120	138	26	24	24	24	6	20	14	90	44	65	12	65	134	145	142	8	3.6	
125	270	220	26	8	M24	139.7	141.5	145	166	28	26	26	26	6	22	16	115	48	68	12	68	162	170	162	8	4.0	
150	300	250	26	8	M24	168.3	170.5	174	194	30	28	28	28	6	24	18	140	52	75	12	75	192	200	192	10	4.5	
200	360	310	26	12	M24	219.1	221.5	226	250	32	30	30	30	6	26	18	190	52	80	16	80	244	256	252	10	6.3	
250	425	370	30	12	M27	273.0	276.5	281	302	35	32	32	32	8	26	18	235	60	88	18	88	298	310	304	12	7.1	
300	485	430	30	16	M27	323.9	327.5	333	356	38	34	34	34	8	28	20	285	67	92	18	92	352	364	364	12	8.0	
350	555	490	33	16	M30	355.6	359.5	365	408	42	38	38	38	8	32	22	332	72	100	20	100	398	418	418	12	8.0	
400	620	550	36	16	M33	406.4	411.0	416	462	48	40	40	40	8	34	24	380	78	110	20	110	452	472	472	12	8.8	
450	670	600	36	20	M33	457.0	462.0	467	510	54	46	46	50	8	36	26	425	84	110	20	110	500	520	520	12	8.8	
500	730	660	36	20	M33	508.0	513.5	519	568	58	48	48	51	8	38	28	475	90	125	20	125	558	580	580	12	10	
600	840	770	39	20	M36	610.0	616.5	622	670	68	48	58	66	8	40	30	575	100	125	20	115	660	684	684	12	11	
700	960	875	42	24	M39	711.0		721	-	85	50			8	-	30	-	-	129	20	125	760	-	780	12	-	
800	1085	990	48	24	M45	813.0	**	824	-	95	53	**	**	8	-	35	-	-	138	22	135	864	-	882	12	-	
900	1185	1090	48	28	M45	914.0		-	-	**	57			-	-	-	-	-	148	24	-	968	-	982	12	-	
1000	1320	1210	56	28	M52	1016	-	-	-		63			-	-	-	-	-	160	24	-	1070	-	1086	16	-	
1200	1530	1420	56	32	M52	1219	To be specified by the purchaser																				
1400	1755	1640	62	36	M56	1422																					
1600	1975	1860	62	40	M56	1626																					
1800	2195	2070	70	44	M64	1829																					
2000	2425	2300	70	48	M64	2032																					

* Use is limited up to DN500.

** To be specified by the purchaser.

*** For flanges type 21 the outside hub diameter approximately corresponds to the outside pipe diameter.

Note 1: Dimensions N1, N2 and N3 are measured at the intersection of the hub draft angle and the back face of the flange.

Note 2:The centre portion of the face of a flange type 05 need not be machined provided that the diameter of the un-machined portion does not exceed the recommended diameter for G max.

Note 3: For d1 dimensions see document "Flange Facing Dimensions EN 1092-1".

EN 1092-1 PN40 Flanges

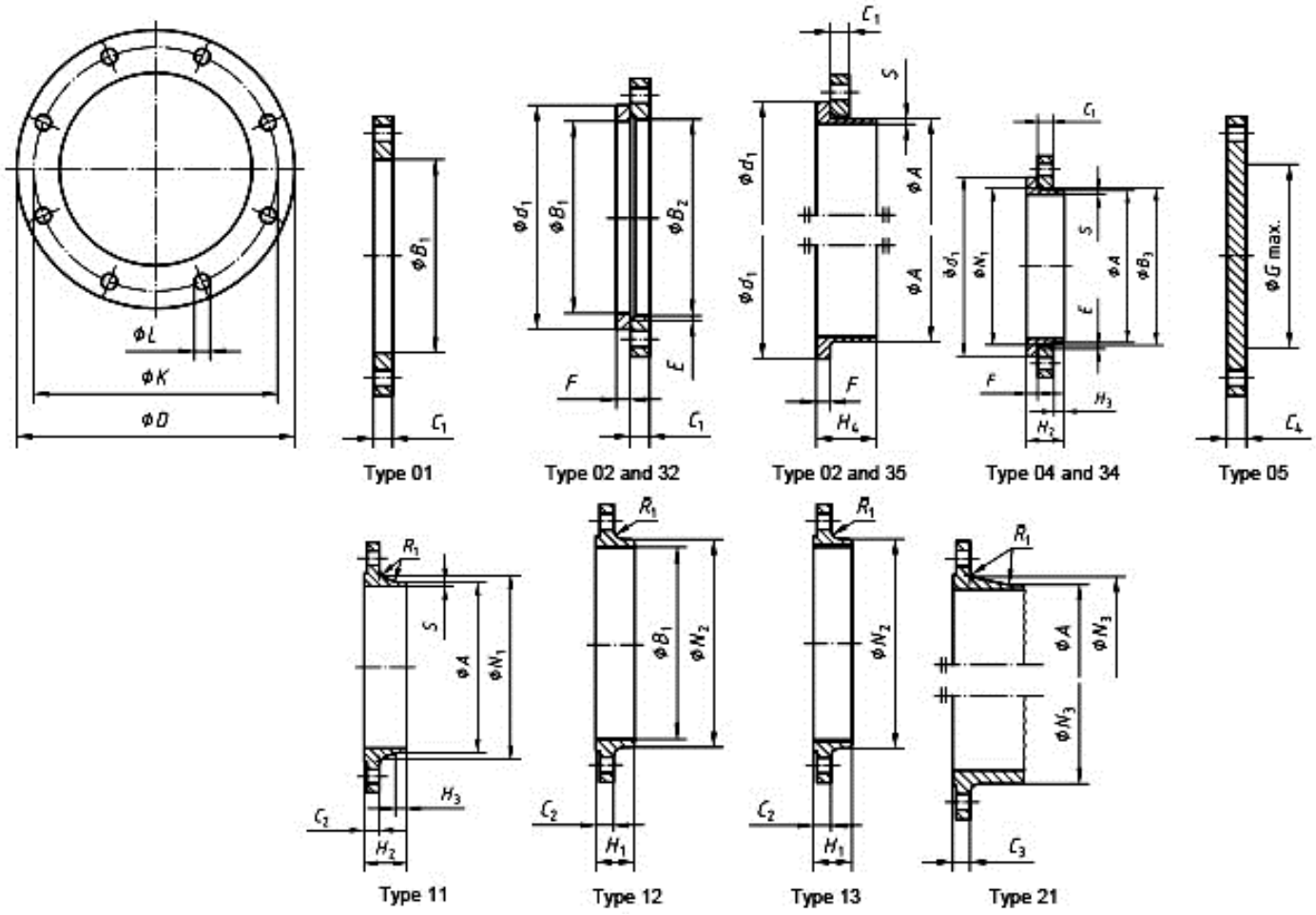

Flange type (typ) as in EN 1092-1	
01 (Plate [slip-on] flanges for welding)	13 (Hubbed threaded flanges)
02 (Loose plate flanges with weld-on plate collar)	21 (Integral flanges)
04 (Loose plate flanges with weld-neck collar)	32 (Weld-on plate collars)
05 (Blank [blind] flanges)	34 (Weld-neck collars)
11 (Weld-neck flanges)	35 (Weldring neck)
12 (Hubbed slip-on flanges for welding)	

EN 1092-1 PN40 Flanges

DN	Mating dimensions: Outside Diameter	Mating dimensions: Diameter of Bolt Circle	Mating dimensions: Diameter of Bolt Hole	Mating dimensions: Bolting		Outside Diameter of Neck	Bore Diameter			Flange thickness				Chamfer	Collar thickness		Diameter of Shoulders	Length				Neck diameters			Corner Radius	Wall thickness	
	D	K	L	No	Size	A	B1	B2	B3	C1	C2	C3	C4	E	F		G max	H1	H2	H3	H4	N1	N2	N3	R1	S	
	Flange type																										
	01, 02, 04, 05, 11, 12, 13, 21					11 21*** 34*	01 12 32	02	04	01 02 04	11 12 13	21	05	02 04	32 34*	35	05	12 13	11 34*	11 34*	35	11 34	12 13	21	11 12 13 21	34*	11 35
10	90	60	14	4	M12	17.2	18.0	21	31	14	16	16	16	3	12	5	-	22	35	6	35	28	30	28	4	1.8	See "Wall thickness and end preparation"
15	95	65	14	4	M12	21.3	22.0	25	35	14	16	16	16	3	12	5	-	22	38	6	38	32	35	32	4	2.0	
20	105	75	14	4	M12	26.9	27.5	31	42	16	18	18	18	4	14	6	-	26	40	6	40	40	45	40	4	2.3	
25	115	85	14	4	M12	33.7	34.5	38	49	16	18	18	18	4	14	7	-	28	40	6	40	46	52	50	4	2.6	
32	140	100	18	4	M16	42.4	43.5	47	59	18	18	18	18	5	14	8	-	30	42	6	42	56	60	60	6	2.6	
40	150	110	18	4	M16	48.3	49.5	53	67	18	18	18	18	5	14	8	-	32	45	7	45	64	70	70	6	2.6	
50	165	125	18	4	M16	60.3	61.5	65	77	20	20	20	20	5	16	10	-	34	48	8	48	75	84	84	6	2.9	
65	185	145	18	8	M16	76.1	77.5	81	96	22	22	22	22	6	16	11	55	38	52	10	52	90	104	104	6	2.9	
80	200	160	18	8	M16	88.9	90.5	94	114	24	24	24	24	6	18	12	70	40	58	12	58	105	118	120	8	3.2	
100	235	190	22	8	M20	114.3	116.0	120	138	26	24	24	24	6	20	14	90	44	65	12	65	134	145	142	8	3.6	
125	270	220	26	8	M24	139.7	141.5	145	166	28	26	26	26	6	22	16	115	48	68	12	68	162	170	162	8	4.0	
150	300	250	26	8	M24	168.3	170.5	174	194	30	28	28	28	6	24	18	140	52	75	12	75	192	200	192	10	4.5	
200	375	320	30	12	M27	219.1	221.5	226	250	36	34	34	36	6	28	20	190	52	88	16	88	244	260	254	10	6.3	
250	450	385	33	12	M30	273.0	276.5	281	312	42	38	38	38	8	30	22	235	60	105	18	105	306	312	312	12	7.1	
300	515	450	33	16	M30	323.9	327.5	333	368	52	42	42	42	8	34	25	285	67	115	18	115	362	380	376	12	8.0	
350	580	510	36	16	M33	355.6	359.5	365	418	58	46	46	46	8	32	28	330	72	125	20	125	408	424	432	12	8.8	
400	660	585	39	16	M36	406.4	411.0	416	472	65	50	50	50	8	42	32	380	78	135	20	135	462	478	498	12	11.0	
450	685	610	39	20	M36	457.0	462.0	467	510		57	57	57	8	46	-	425	84	135	20	-	500	522	522	12	12.5	
500	755	670	42	20	M39	508.0	513.5	519	572	**	57	57	57	8	50	-	475	90	140	20	-	562	576	576	12	14.2	
600	890	795	48	20	M45	610.0	616.5	622	676		72	72	72	8	40	-	575	100	150	20	-	666	686	686	12	16.0	
700	995	900	48	24	M45	To be specified by the purchaser																					
800	1140	1030	56	24	M52																						
900	1250	1140	56	28	M52																						
1000	1360	1250	56	28	M52																						
1200	1575	1460	62	32	M56																						
1400	1795	1680	62	36	M56																						
1600	2025	1900	70	40	M64																						
1800	2195	2070	70	44	M64																						
2000	2425	2300	70	48	M64																						

* Use is limited up to DN600.

** To be specified by the purchaser.

*** For flanges type 21 the outside hub diameter approximately corresponds to the outside pipe diameter.

Note 1: Dimensions N1, N2 and N3 are measured at the intersection of the hub draft angle and the back face of the flange.

Note 2: The centre portion of the face of a flange type 05 need not be machined provided that the diameter of the un-machined portion does not exceed the recommended diameter for G max.

Note 3: For d1 dimensions see document "Flange Facing Dimensions EN 1092-1".

EN 1092-1 PN63 Flanges

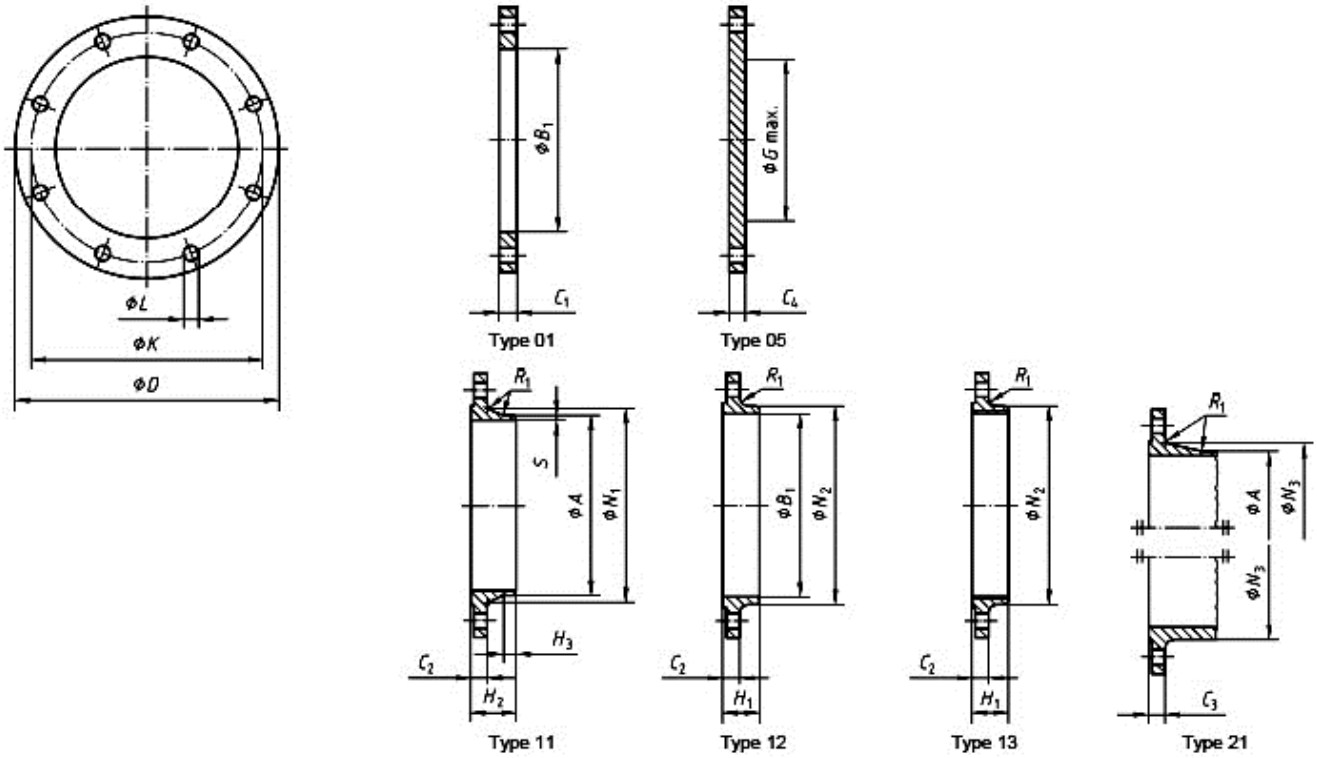

Flange type (typ) as in EN 1092-1	
01 (Plate [slip-on] flanges for welding)	12 (Hubbed slip-on flanges for welding)
05 (Blank [blind] flanges)	13 (Hubbed threaded flanges)
11 (Weld-neck flanges)	21 (Integral flanges)

EN 1092-1 PN63 Flanges

DN	Mating dimensions					Outside Diameter of Neck	Bore Diameter	Flange thickness				Diameter of Shoulders	Length			Neck diameters			Corner Radius	Wall thickness
	Outside Diameter	Diameter of Bolt Circle	Diameter of Bolt Hole	Bolting																
	D	K	L	No	Size	A	B1	C1	C2	C3	C4	G max	H1	H2	H3	N1	N2	N3	R1	S
	Flange type																			
	01, 05, 11, 12, 13, 21					11 21***	01 12	01	11 12 13	21	05	05	12 13	11	11	11	12 13	21	11 12 13 21	11
10	100	70	14	4	M12	17.2	18.0	20	20	20	20	-	28	45	6	32	40	40	4	See "Wall thickness and end preparation"
15	105	75	14	4	M12	21.3	22.0	20	20	20	20	-	28	45	6	34	43	45	4	
20	130	90	18	4	M16	26.9	27.5	22	22	22	22	-	30	48	8	42	52	50	4	
25	140	100	18	4	M16	33.7	34.5	24	24	24	24	-	32	58	8	52	60	61	4	
32	155	110	22	4	M20	42.4	43.5	24	24	26	24	-	32	60	8	62	68	68	6	
40	170	125	22	4	M20	48.3	49.5	26	26	26	26	-	34	62	10	70	80	82	6	
50	180	135	22	4	M20	60.3	61.5	26	26	26	26	-	36	62	10	82	90	90	6	
65	205	160	22	8	M20	76.1	77.5	26	26	26	26	45	40	68	12	98	112	105	6	
80	215	170	22	8	M20	88.9	90.5	30	28	28	28	60	44	72	12	112	125	122	8	
100	250	200	26	8	M24	114.3	116.0	32	30	30	30	80	52	78	12	138	152	146	8	
125	295	240	30	8	M27	139.7	141.5	34	34	34	34	105	56	88	12	168	185	177	8	
150	345	280	33	8	M30	168.3	170.5	36	36	36	36	130	60	95	12	202	215	204	10	
200	415	345	36	12	M33	219.1	221.5	48	42	42	42	180	-	110	16	256	-	264	10	
250	470	400	36	12	M33	273.0	276.5	55	46	46	46	220	-	125	18	316	-	320	12	
300	530	460	36	16	M33	323.9	327.5	65	52	52	52	270	-	140	18	372	-	378	12	
350	600	525	39	16	M36	355.6	359.5	72	56	56	56	310	-	150	20	420	-	434	12	
400	670	585	42	16	M39	406.4	411.0	80	60	60	60	360	-	160	20	475	-	490	12	
500	800	705	48	20	M45	To be specified by the purchaser														
600	930	820	56	20	M52															
700	1045	935	56	24	M52															
800	1165	1050	62	24	M56															
900	1285	1170	62	28	M56															
1000	1415	1290	70	28	M64															
1200	1665	1530	78	32	M72x6															

*** For flanges type 21 the outside hub diameter approximately corresponds to the outside pipe diameter.

Note 1: Dimensions N1, N2 and N3 are measured at the intersection of the hub draft angle and the back face of the flange.

Note 2:The centre portion of the face of a flange type 05 need not be machined provided that the diameter of the un-machined portion does not exceed the recommended diameter for G max.

Note 3: For d1 dimensions see document "Flange Facing Dimensions EN 1092-1".

EN 1092-1 PN100 Flanges

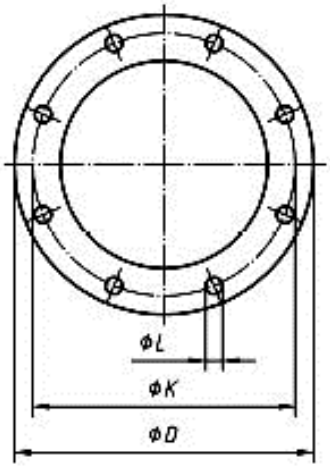

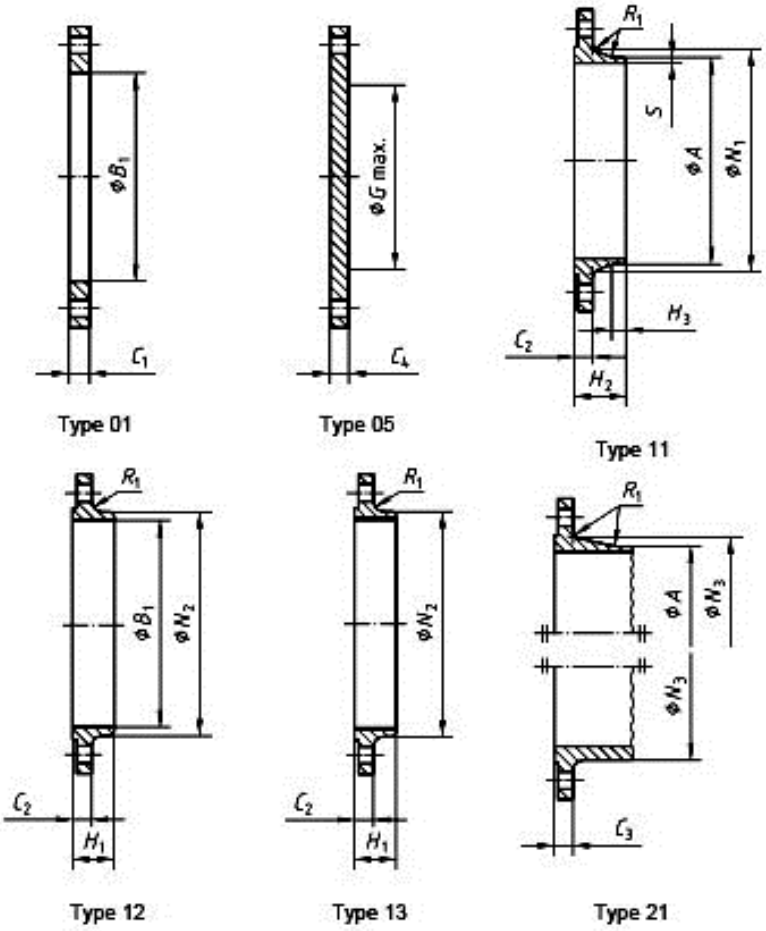

Flange type (typ) as in EN 1092-1	
01 (Plate [slip-on] flanges for welding)	12 (Hubbed slip-on flanges for welding)
05 (Blank [blind] flanges)	13 (Hubbed threaded flanges)
11 (Weld-neck flanges)	21 (Integral flanges)

EN 1092-1 PN100 Flanges

DN	Mating dimensions					Outside Diameter of Neck	Bore Diameter	Flange thickness				Diameter of Shoulders	Length			Neck diameters			Corner Radius	Wall thickness
	Outside Diameter	Diameter of Bolt Circle	Diameter of Bolt Hole	Bolting																
	D	K	L	No	Size	A	B1	C1	C2	C3	C4	G max	H1	H2	H3	N1	N2	N3	R1	S
	Flange type																			
	01, 05, 11, 12, 13, 21					11 21***	01 12	01	11 12 13	21	05	05	12 13	11	11	11	12 13	21	11 12 13 21	11
10	100	70	14	4	M12	17.2	18.0	20	20	20	20	-	28	45	6	32	40	40	4	See "Wall thickness and end preparation"
15	105	75	14	4	M12	21.3	22.0	20	20	20	20	-	28	45	6	34	43	45	4	
20	130	90	18	4	M16	26.9	27.5	22	22	22	22	-	30	48	8	42	52	50	4	
25	140	100	18	4	M16	33.7	34.5	24	24	24	24	-	32	58	8	52	60	61	4	
32	155	110	22	4	M20	42.4	43.5	24	24	26	24	-	32	60	8	62	68	68	6	
40	170	125	22	4	M20	48.3	49.5	26	26	28	26	-	34	62	10	70	80	82	6	
50	195	145	26	4	M24	60.3	61.5	28	28	30	30	-	36	68	10	90	95	96	6	
65	220	170	26	8	M24	76.1	77.5	30	30	34	30	45	40	76	12	108	118	118	6	
80	230	180	26	8	M24	88.9	90.5	34	32	36	32	60	44	78	12	120	130	128	8	
100	265	210	30	8	M27	114.3	116.0	36	36	40	36	80	52	90	12	150	158	150	8	
125	315	250	33	8	M30	139.7	141.5	42	40	40	40	105	56	105	12	180	188	185	8	
150	355	290	33	12	M30	168.3	170.5	48	44	44	44	130	60	115	12	210	225	216	10	
200	430	360	36	12	M33	219.1	221.5	60	52	52	52	180	-	130	16	278	-	278	10	
250	505	430	39	12	M36	273.0	276.5	72	60	60	60	210	-	157	18	340	-	340	12	
300	585	500	42	16	M39	323.9	327.5	84	68	68	68	260	-	170	18	400	-	407	12	
350	655	560	48	16	M45	355.6	359.5	95	74	74	74	300	-	189	20	460	-	460	12	
400	715	620	48	16	M45	406.4	411.0	80	60	60	60	360	-	160	20	475	-	490	12	
500	870	760	56	20	M52	508.0	513.5	To be specified by the purchaser												

*** For flanges type 21 the outside hub diameter approximately corresponds to the outside pipe diameter.

Note 1: Dimensions N1, N2 and N3 are measured at the intersection of the hub draft angle and the back face of the flange.

Note 2:The centre portion of the face of a flange type 05 need not be machined provided that the diameter of the un-machined portion does not exceed the recommended diameter for G max.

Note 3: For d1 dimensions see document "Flange Facing Dimensions EN 1092-1".

EN 1092-1 PN160 Flanges

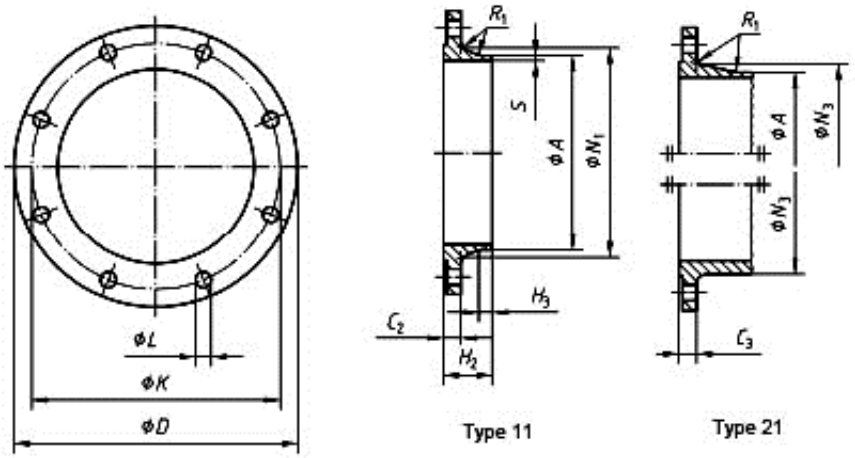

Flange type (typ) as in EN 1092-1	
11 (Weld-neck flanges)	21 (Integral flanges)

DN	Mating dimensions					Outside Diameter of Neck	Flange thickness		Length		Neck diameters		Corner Radius		Wall thickness
	Outside Diameter	Diameter of Bolt Circle	Diameter of Bolt Hole	Bolting											
	D	K	L	No	Size	A	C2	C3	H2	H3	N1	N3	R1		S
	Flange type														
	11, 21					11 21***	11	21	11	11	11	21	11	21	11
10	100	70	14	4	M12	17.2	20	20	45	6	32	40	4	4	2.0
15	105	75	14	4	M12	21.3	20	20	45	6	34	45	4	4	2.0
25	140	100	18	4	M16	33.7	24	24	58	8	52	61	4	4	2.9
40	170	125	22	4	M20	48.3	28	28	64	10	70	82	6	4	3.6
50	195	145	26	4	M24	60.3	30	30	75	10	90	96	6	4	4.0
65	220	170	26	8	M24	76.1	34	34	82	12	108	118	6	5	5.0
80	230	180	26	8	M24	88.9	36	36	86	12	120	128	8	5	6.3
100	265	210	30	8	M27	114.3	40	40	100	12	150	150	8	5	8.0
125	315	250	33	8	M30	139.7	44	44	115	14	180	184	8	6	10.0
150	355	290	33	12	M30	168.3	50	50	128	14	210	224	10	6	12.5
200	430	360	36	12	M33	219.1	60	60	140	16	278	288	10	8	16.0
250	515	430	42	12	M39	273.0	68	68	155	18	340	346	12	8	20.0
300	585	500	42	16	M39	323.9	78	78	175	18	400	414	12	10	22.2

*** For flanges type 21 the outside hub diameter approximately corresponds to the outside pipe diameter.
Note 1: Dimensions N1 and N3 are measured at the intersection of the hub draft angle and the back face of the flange.
Note 2: For d1 dimensions see document "Flange Facing Dimensions EN 1092-1".

EN 1092-1 PN250 Flanges

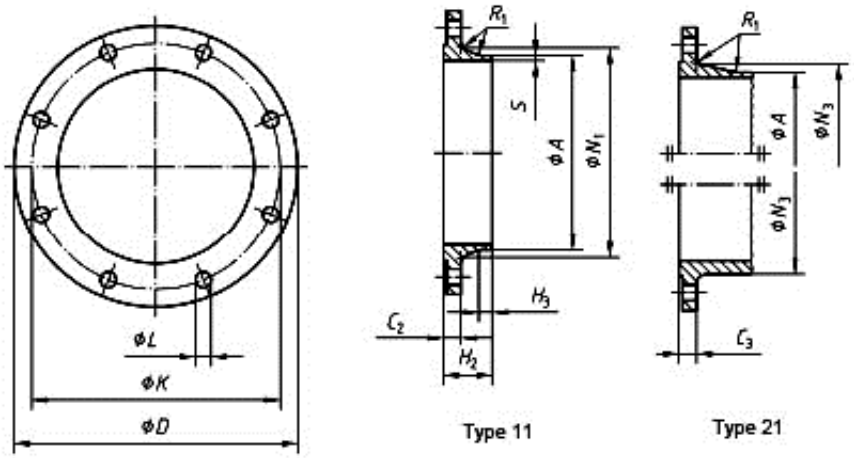

Flange type (typ) as in EN 1092-1	
11 (Weld-neck flanges)	21 (Integral flanges)

DN	Mating dimensions					Outside Diameter of Neck	Flange thickness		Length		Neck diameters		Corner Radius		Wall thickness
	Outside Diameter	Diameter of Bolt Circle	Diameter of Bolt Hole	Bolting											
	D	K	L	No	Size	A	C2	C3	H2	H3	N1	N3	R1		S
	Flange type														
	11, 21					11 21***	11	21	11	11	11	21	11	21	11
10***	125	85	18	4	M16	-	-	24	-	-	-	46	-	4	-
15	130	90	18	4	M16	21.3	26	26	60	6	48	52	4	4	2.6
25	150	105	22	4	M20	33.7	28	28	65	8	60	63	4	4	3.6
40	185	135	26	4	M24	48.3	34	34	80	10	84	90	6	4	5.0
50	200	150	26	8	M24	60.3	38	38	85	10	95	102	6	5	6.3
65	230	180	26	8	M24	76.1	42	42	95	12	124	125	6	5	8.0
80	255	200	30	8	M27	101.6	46	46	102	12	136	142	8	6	11.0
100	300	235	33	8	M30	127.0	54	54	120	14	164	168	8	6	14.2
125	340	275	33	12	M30	152.4	60	60	140	16	200	207	8	6	16.0
150	390	320	36	12	M33	177.8	68	68	160	18	240	246	10	8	17.5
200	485	400	42	12	M39	244.5	82	82	190	25	305	314	10	8	25.0
250	585	490	48	16	M45	298.5	100	100	215	30	385	394	12	10	32.0
300*	690	590	52	16	M48	-	-	120	-	-	-	480	-	10	-

* For flange type 21.
** For flange type 11 use flanges PN320.
*** For flanges type 21 the outside hub diameter approximately corresponds to the outside pipe diameter.
Note 1: Dimensions N1 and N3 are measured at the intersection of the hub draft angle and the back face of the flange.
Note 2: For d1 dimensions see document "Flange Facing Dimensions EN 1092-1".

EN 1092-1 PN320 Flanges

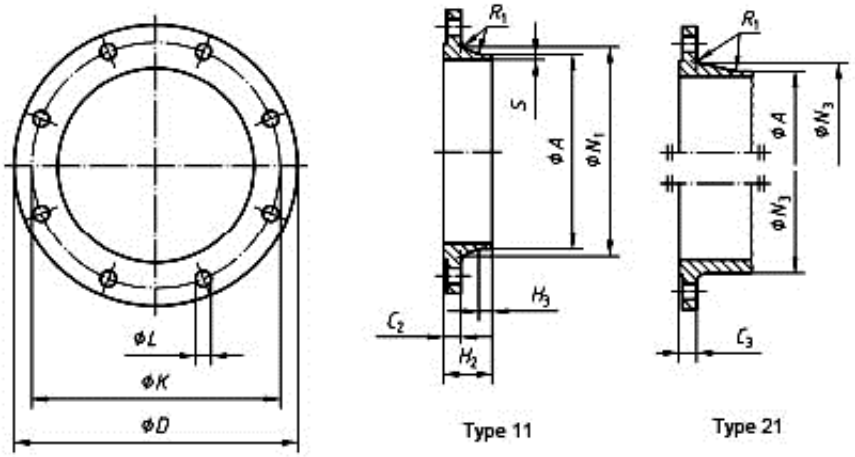

Flange type (typ) as in EN 1092-1	
11 (Weld-neck flanges)	21 (Integral flanges)

DN	Mating dimensions														
	Outside Diameter	Diameter of Bolt Circle	Diameter of Bolt Hole	Bolting		Outside Diameter of Neck	Flange thickness		Length		Neck diameters		Corner Radius		Wall thickness
	D	K	L	No	Size	A	C2	C3	H2	H3	N1	N3	R1		S
	Flange type														
	11, 21					11 21***	11	21	11	11	11	21	11	21	11
10	125	85	18	4	M16	17.2	24	24	58	6	44	46	4	4	2.6
15	130	90	18	4	M16	21.3	26	26	60	6	48	52	4	4	3.2
25	160	115	22	4	M20	33.7	34	34	78	8	68	72	4	4	5.0
40	195	145	26	4	M24	48.3	38	38	88	10	92	96	6	5	6.3
50	210	160	26	8	M24	63.5	42	42	100	10	106	110	6	5	8.0
65	255	200	30	8	M27	88.9	51	51	120	12	138	137	6	6	11.0
80	275	220	30	8	M27	101.6	55	55	130	14	156	160	8	6	12.5
100	335	265	36	8	M33	133.0	65	65	145	16	186	190	8	8	16.0
125	380	310	36	12	M33	168.3	75	75	175	20	230	235	8	8	20.0
150	425	350	39	12	M36	193.7	84	84	195	25	265	266	10	10	25.0
200	525	440	42	16	M39	244.5	103	103	235	30	345	350	10	10	30.0
250	640	540	52	16	M48	323.9	125	125	300	40	428	432	12	10	40.0

*** For flanges type 21 the outside hub diameter approximately corresponds to the outside pipe diameter.
Note 1: Dimensions N1 and N3 are measured at the intersection of the hub draft angle and the back face of the flange.
Note 2: For d1 dimensions see document "Flange Facing Dimensions EN 1092-1".

EN 1092-1 PN400 Flanges

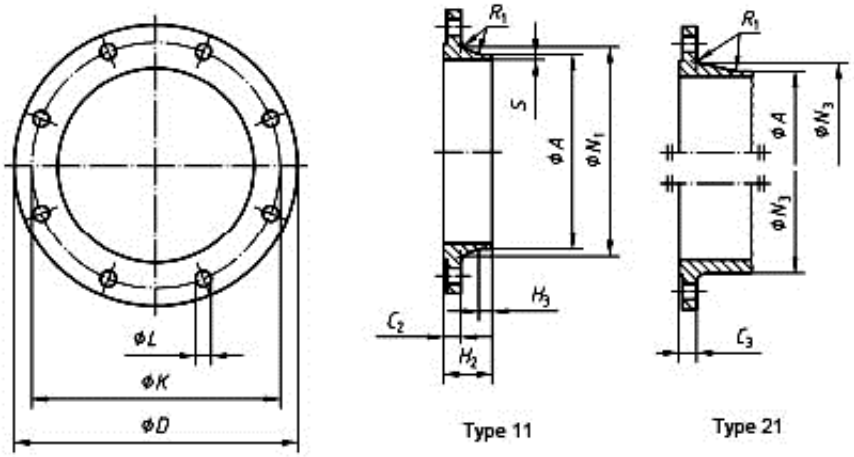

Flange type (typ) as in EN 1092-1	
11 (Weld-neck flanges)	21 (Integral flanges)

DN	Mating dimensions														
	Outside Diameter	Diameter of Bolt Circle	Diameter of Bolt Hole	Bolting		Outside Diameter of Neck	Flange thickness		Length		Neck diameters		Corner Radius		Wall thickness
	D	K	L	No	Size	A	C2	C3	H2	H3	N1	N3	R1		S
	Flange type														
	11, 21					11 21***	11	21	11	11	11	21	11	21	11
10	125	85	18	4	M16	17.2	28	28	65	8	48	48	4	4	3.6
15	145	100	22	4	M20	26.9	30	30	68	8	56	57	4	4	5.0
25	180	130	26	4	M24	42.4	38	38	90	10	82	81	4	5	7.1
40	220	165	30	4	M27	60.3	48	48	110	12	106	105	6	5	10.0
50	235	180	30	8	M27	76.1	52	52	120	15	120	120	6	6	12.5
65	290	225	33	8	M30	101.6	64	64	135	18	158	158	6	6	16.0
80	305	240	33	8	M30	114.3	68	68	150	20	174	174	8	8	17.5
100	370	295	39	8	M36	139.7	80	80	175	25	216	216	8	8	22.2
125	415	340	39	12	M36	193.7	92	92	200	30	258	259	8	10	30.0
150	475	390	42	12	M39	219.1	105	105	225	35	302	302	10	10	35.0
200	585	490	48	16	M45	273.0	130	130	280	40	388	388	10	10	40.0

*** For flanges type 21 the outside hub diameter approximately corresponds to the outside pipe diameter.
Note 1: Dimensions N1 and N3 are measured at the intersection of the hub draft angle and the back face of the flange.
Note 2: For d1 dimensions see document "Flange Facing Dimensions EN 1092-1".

SHRI PARVATI INDUSTRIES

BS FLANGES

Dimensional reference tables

ANSI / JIS / DIN / EN 1092-1 / BS

Reference data from the supplied technical catalogue.

Verify dimensions against the specified standard edition and approved project drawing before procurement.

This reference is not a declaration of stocked sizes, material grades or service suitability.

Dimensions, drawings, units and technical footnotes on the following table pages have been preserved.

BS4504 PN2.5 Flanges

CODE 111

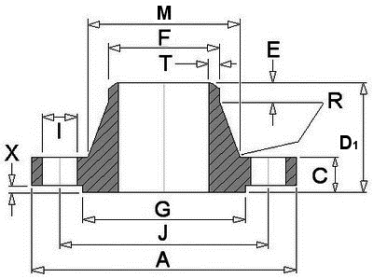

CODE 101

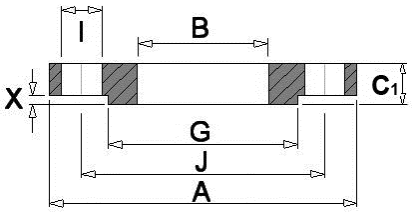

CODE 105

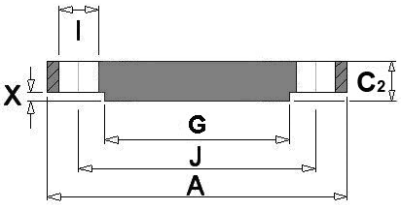

Dimensions in mm

Nom. Size	Flange					Raised Face		Drilling			Bolting	Neck					Bore Diameter
DN	A	C	C1	C2	D1	G	X	No.	I	J		M	F	E	R	T	B
10	75	12	12	12	28	35	2	4	11	50	M10	26	17.2	6	3	1.8	18.0
15	80	12	12	12	30	40	2	4	11	55	M10	30	21.3	6	3	2.0	22.0
20	90	14	14	14	32	50	2	4	11	65	M10	38	26.9	6	4	2.3	27.5
25	100	14	14	14	35	60	2	4	11	75	M10	42	33.7	6	4	2.6	34.5
32	120	14	16	14	35	70	2	4	14	90	M12	55	42.4	6	5	2.6	43.5
40	130	14	16	14	38	80	3	4	14	100	M12	62	48.3	7	5	2.6	49.5
50	140	14	16	14	38	90	3	4	14	110	M12	74	60.3	8	5	2.9	61.5
65	160	14	16	14	38	110	3	4	14	130	M12	88	76.1	9	6	2.9	77.5
80	190	16	18	16	42	128	3	4	18	150	M16	102	88.9	10	6	3.2	90.5
100	210	16	18	16	45	148	3	4	18	170	M16	130	114.3	10	6	3.6	116.0
125	240	18	20	18	48	178	3	8	18	200	M16	155	139.7	10	6	4.0	141.5
150	265	18	20	18	48	202	3	8	18	225	M16	184	168.3	12	8	4.5	170.5
200	320	20	22	20	55	258	3	8	18	280	M16	236	219.1	15	8	5.6	221.5
250	375	22	24	22	60	312	3	12	18	335	M16	290	273.0	15	10	6.3	276.5
300	440	22	24	22	62	365	4	12	22	395	M20	342	323.9	15	10	7.1	327.6
350	490	22	26	22	62	415	4	12	22	445	M20	385	355.6	15	10	7.1	359.0
400	540	22	28	22	65	465	4	16	22	495	M20	438	406.4	15	10	7.1	411.0
450	595	24	30	24	65	520	4	16	22	550	M20	492	457.0	15	12	7.1	462.0
500	645	24	30	24	68	570	4	20	22	600	M20	538	508.0	15	12	7.1	513.5
600	755	24	32	34	70	670	5	20	26	705	M24	640	610.0	16	12	7.1	616.5
700	860	24	36	-	70	-	5	24	26	810	M24	740	711.0	16	12	-	-
800	975	26	38	-	70	-	5	24	30	920	M27	842	813.0	16	12	-	-
900	1075	26	40	-	70	-	5	24	30	1020	M27	942	914.0	16	12	-	-
1000	1175	26	42	-	70	-	5	28	30	1120	M27	1045	1016.0	16	12	-	-
1200	1375	26	44	-	70	-	5	32	30	1320	M27	1245	1220.0	16	16	-	-
1400	1575	26	48	-	70	-	5	36	30	1520	M27	1445	1420.0	16	16	-	-
1600	1790	26	51	-	80	-	5	40	30	1730	M27	1645	1620.0	20	16	-	-
1800	1990	26	54	-	80	-	5	44	30	1930	M27	1845	1820.0	20	16	-	-
2000	2190	26	58	-	80	-	5	48	30	2130	M27	2045	2020.0	22	16	-	-

* Care should be taken with these sizes as the pipe o.d. does not relate to normal stainless steel dimensions.

1. Weldnecks (code 111) are bored to suit schedule of pipework used.
2. Code 105 flanges are supplied flat faced unless otherwise requested by the purchaser.

BS4504 PN6 Flanges

CODE 111

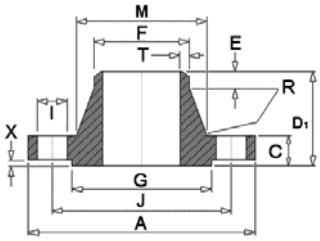

CODE 101

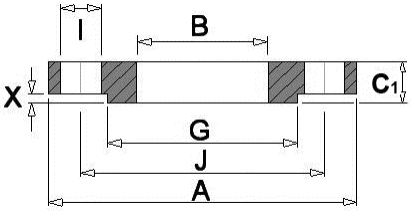

CODE 112

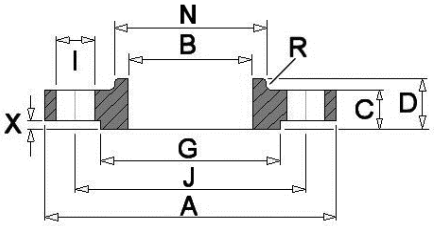

CODE 113

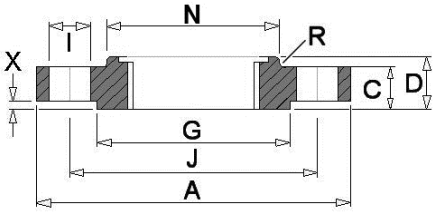

CODE 105

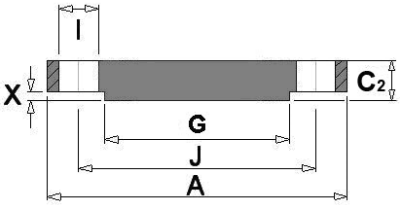

Dimensions in mm

Nom. Size	Flange						Raised Face		Boss	Drilling			Bolting	Neck					Bore Diameter
DN	A	C	C1	C2	D	D1	G	X	N	No.	I	J		M	F	E	R	T	B
10	75	12	12	12	20	28	35	2	25	4	11	50	M10	26	17.2	6	3	1.8	18.0
15	80	12	12	12	20	30	40	2	30	4	11	55	M10	30	21.3	6	3	2.0	22.0
20	90	14	14	14	24	32	50	2	40	4	11	65	M10	38	26.9	6	4	2.3	27.5
25	100	14	14	14	24	35	60	2	50	4	11	75	M10	42	33.7	6	4	2.6	34.5
32	120	14	16	14	26	35	70	2	60	4	14	90	M12	55	42.4	6	5	2.6	43.5
40	130	14	16	14	26	38	80	3	70	4	14	100	M12	62	48.3	7	5	2.6	49.5
50	140	14	16	14	28	38	90	3	80	4	14	110	M12	74	60.3	8	5	2.9	61.5
65	160	14	16	14	32	38	110	3	100	4	14	130	M12	88	76.1	9	6	2.9	77.5
80	190	16	18	16	34	42	128	3	110	4	18	150	M16	102	88.9	10	6	3.2	90.5
100	210	16	18	16	40	45	148	3	130	4	18	170	M16	130	114.3	10	6	3.6	116.0
125	240	18	20	18	44	48	178	3	160	8	18	200	M16	155	139.7	10	6	4.0	141.5
150	265	18	20	18	44	48	202	3	185	8	18	225	M16	184	168.3	12	8	4.5	170.5
200	320	20	22	20	44	55	258	3	240	8	18	280	M16	236	219.1	15	8	5.6	221.5
250	375	22	24	22	44	60	312	3	295	12	18	335	M16	290	273.0	15	10	6.3	276.5
300	440	22	24	22	44	62	365	4	355	12	22	395	M20	342	323.9	15	10	7.1	327.5
350	490	22	26	22	-	62	415	4	-	12	22	445	M20	385	355.6	15	10	7.1	359.5
400	540	22	28	22	-	65	465	4	-	16	22	495	M20	438	406.4	15	10	7.1	411.0
450	595	24	30	24	-	65	520	4	-	16	22	550	M20	492	457.0	15	12	7.1	462.0
500	645	24	30	24	-	68	570	4	-	20	22	600	M20	538	508.0	15	12	7.1	513.5
600	755	24	32	34	-	70	670	5	-	20	26	705	M24	640	610.0	16	12	7.1	616.5
700	860	24	40	38	-	70	775	5	-	24	26	810	M24	740	711.0	16	12	7.1	-
800	975	24	44	42	-	70	880	5	-	24	30	920	M27	842	813.0	16	12	7.1	-
900	1075	26	48	46	-	70	980	5	-	24	30	1020	M27	942	914.0	16	12	7.1	-
1000	1175	26	52	52	-	70	1080	5	-	28	30	1120	M27	1045	1016.0	16	12	7.1	-
1200	1405	28	60	60	-	90	1295	5	-	32	33	1340	M30	1248	1220.0	20	12	8.0	-
1400	1630	32	68	68	-	90	1510	5	-	36	36	1560	M33	1452	1420.0	20	12	8.0	-
1600	1830	34	76	76	-	90	1710	5	-	40	36	1760	M33	1655	1620.0	20	12	9.0	-
1800	2045	36	84	84	-	100	1920	5	-	44	39	1970	M36	1855	1820.0	20	15	10.0	-
2000	2265	38	92	92	-	110	2125	5	-	48	42	2180	M39	2058	2020.0	25	15	11.0	-

* Care should be taken with these sizes as the pipe o.d. does not relate to normal stainless steel dimensions.

1. Weldnecks (code 111) are bored to suit schedule of pipework used.
2. Code 105 flanges are supplied flat faced unless otherwise requested by the purchaser.

BS4504 PN10 Flanges

CODE 111

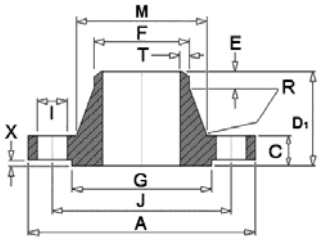

CODE 101

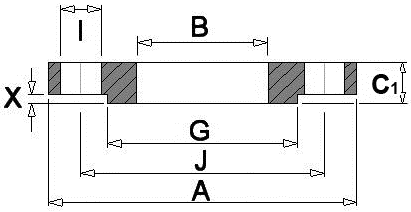

CODE 112

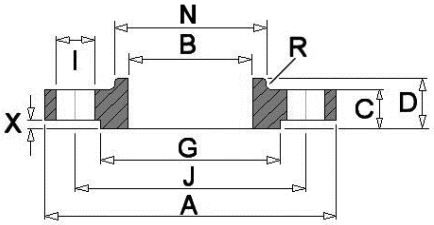

CODE 113

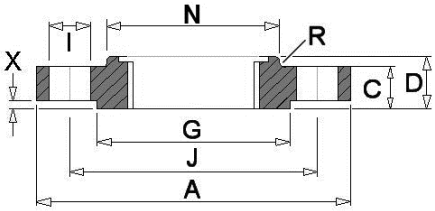

CODE 105

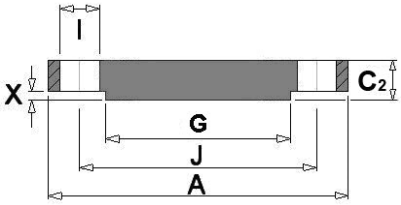

Dimensions in mm

DN	A	C	C1	C2	D	D1	G	X	N	No.	I	J	Bolting	M	F	E	R	T	B
10	90	14	14	14	20	35	40	2	30	4	14	60	M12	28	17.2	6	3	1.8	18.0
15	95	14	14	14	20	35	45	2	35	4	14	65	M12	32	21.3	6	3	2.0	22.0
20	105	16	16	16	24	38	58	2	45	4	14	75	M12	39	26.9	6	4	2.3	27.5
25	115	16	16	16	24	38	68	2	52	4	14	85	M12	46	33.7	6	4	2.6	34.5
32	140	16	18	16	26	40	78	2	60	4	18	100	M16	56	42.4	6	5	2.6	43.5
40	150	16	18	16	26	42	88	3	70	4	18	110	M16	64	48.3	7	5	2.6	49.5
50	165	18	20	18	28	45	102	3	84	4	18	125	M16	74	60.3	8	5	2.9	61.5
65	185	18	20	18	32	45	122	3	104	4 / 8	18	145	M16	92	76.1	10	6	2.9	77.5
80	200	20	20	20	34	50	138	3	118	8	18	160	M16	110	88.9	10	6	3.2	90.5
100	220	20	22	20	40	52	162	3	140	8	18	180	M16	130	114.3	12	6	3.6	116.0
125 *	250	22	22	22	44	55	188	3	168	8	18	210	M16	158	139.7	12	6	4.0	141.5
150	285	22	24	22	44	55	212	3	195	8	22	240	M20	184	168.3	12	8	4.5	170.5
200	340	24	24	24	44	62	268	3	246	8	22	295	M20	234	219.1	16	8	5.6	221.5
250	395	26	26	26	46	68	320	3	298	12	22	350	M20	288	273.0	16	10	6.3	276.5
300	445	26	28	26	46	68	370	4	350	12	22	400	M20	342	323.9	16	10	7.1	327.6
350	505	26	28	26	53	68	430	4	400	16	22	460	M20	390	355.6	16	10	7.1	359.0
400	565	26	32	26	57	72	482	4	456	16	26	515	M24	440	406.4	16	10	7.1	411.0
450	615	28	36	28	63	72	532	4	502	20	26	565	M24	488	457.0	16	12	7.1	462.0
500	670	28	38	28	67	75	585	4	559	20	26	620	M24	540	508.0	16	12	7.1	513.5
600	780	28	42	34	75	80	685	5	658	20	30	725	M27	640	610.0	18	12	7.1	616.5
700	895	30	-	38	-	80	800	5	-	24	30	840	M27	746	711.0	18	12	8.0	-
800	1015	32	-	42	-	90	905	5	-	24	33	950	M30	848	813.0	18	12	8.0	-
900	1115	34	-	46	-	95	1005	5	-	28	33	1050	M30	948	914.0	20	12	10.0	-
1000	1230	34	-	52	-	95	1110	5	-	28	36	1160	M33	1050	1016.0	20	12	10.0	-
1200	1455	38	-	60	-	115	1330	5	-	32	39	1380	M36	1256	1220.0	25	12	11.0	-
1400	1675	42	-	-	-	120	1535	5	-	36	42	1590	M39	1460	1420.0	25	12	12.0	-
1600	1915	46	-	-	-	130	1760	5	-	40	48	1820	M45	1666	1620.0	25	12	14.0	-
1800	2115	50	-	-	-	140	1960	5	-	44	48	2020	M45	1866	1820.0	30	15	15.0	-
2000	2325	54	-	-	-	150	2170	5	-	48	48	2230	M45	2070	2020.0	30	15	16.0	-
2200	2550	58	-	-	-	160	2370	6	-	52	56	2440	M52	2275	2220.0	35	15	-	-
2400	2760	62	-	-	-	170	2570	6	-	56	56	2650	M52	2478	2420.0	35	15	-	-
2600	2960	65	-	-	-	180	2780	6	-	60	56	2850	M52	2680	2620.0	40	18	-	-
2800	3180	70	-	-	-	190	3000	6	-	64	56	3070	M52	2882	2820.0	40	18	-	-
3000	3405	75	-	-	-	200	3210	6	-	68	62	3290	M56	3085	3020.0	40	18	-	-

* Care should be taken with these sizes as the pipe o.d. does not relate to normal stainless steel dimensions.

1. Weldnecks (code 111) are bored to suit schedule of pipework used.
2. Code 105 flanges are supplied flat faced unless otherwise requested by the purchaser.
3. For information sizes DN10 to DN150 use PN16 dimensions.

BS4504 PN16 Flanges

CODE 111

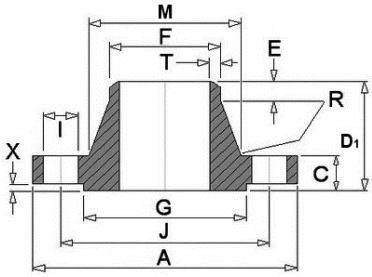

CODE 101

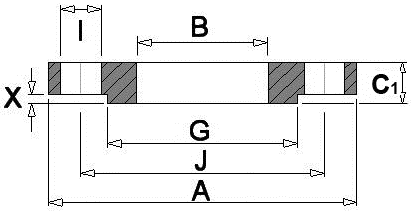

CODE 112

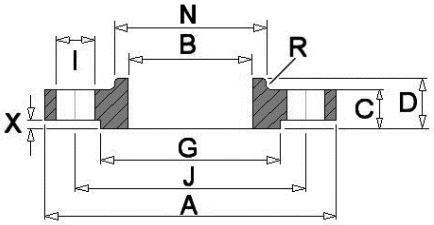

CODE 113

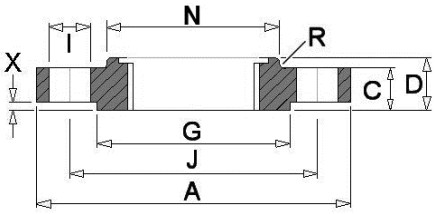

CODE 105

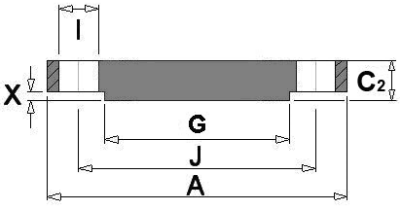

Dimensions in mm

Nom. Size	Flange						Raised Face		Boss	Drilling			Bolting	Neck					Bore Diameter
DN	A	C	C1	C2	D	D1	G	X	N	No.	I	J		M	F	E	R	T	B
10	90	14	14	14	20	35	40	2	30	4	14	60	M12	28	17.2	6	3	1.8	18.0
15	95	14	14	14	20	35	45	2	35	4	14	65	M12	32	21.3	6	3	2.0	22.0
20	105	16	16	16	24	38	58	2	45	4	14	75	M12	39	26.9	6	4	2.3	27.5
25	115	16	16	16	24	38	68	2	52	4	14	85	M12	46	33.7	6	4	2.6	34.5
32	140	16	18	16	26	40	78	2	60	4	18	100	M16	56	42.4	6	5	2.6	43.5
40	150	16	18	16	26	42	88	3	70	4	18	110	M16	64	48.3	7	5	2.6	49.5
50	165	18	20	18	28	45	102	3	84	4	18	125	M16	74	60.3	8	5	2.9	61.5
65	185	18	20	18	32	45	122	3	104	4 / 8	18	145	M16	92	76.1	10	6	2.9	77.5
80	200	20	20	20	34	50	138	3	118	8	18	160	M16	110	88.9	10	6	3.2	90.5
100	220	20	22	20	40	52	162	3	140	8	18	180	M16	130	114.3	12	6	3.6	116.0
125 *	250	22	22	22	44	55	188	3	168	8	18	210	M16	158	139.7	12	6	4.0	141.5
150	285	22	24	22	44	55	212	3	195	8	22	240	M20	184	168.3	12	8	4.5	170.5
200	340	24	26	24	44	62	268	3	246	12	22	295	M20	234	219.1	16	8	5.6	221.5
250	405	26	29	26	46	70	320	3	298	12	26	355	M24	288	273.0	16	10	6.3	276.5
300	460	28	32	28	46	78	378	4	350	12	26	410	M24	342	323.9	16	10	7.1	327.6
350	520	30	35	30	57	82	438	4	400	16	26	470	M24	390	355.6	16	10	8.0	359.0
400	580	32	38	32	63	85	490	4	456	16	30	525	M27	444	406.4	16	10	8.0	411.0
450	640	34	42	36	63	87	550	4	502	20	30	585	M27	490	457.0	16	12	8.0	462.0
500	715	34	46	36	73	90	610	4	559	20	33	650	M30	546	508.0	16	12	8.0	513.5
600	840	36	52	44	83	95	725	5	658	20	36	770	M33	650	610.0	18	12	8.8	616.5
700	910	36	60	48	83	100	795	5	760	24	36	840	M33	750	711.0	18	12	8.6	-
800	1025	38	68	52	90	105	900	5	864	24	39	950	M36	848	813.0	20	12	10.0	-
900	1125	40	76	58	94	110	1000	5	968	28	39	1050	M36	948	914.0	20	12	10.0	-
1000	1255	42	84	64	100	120	1115	5	1072	28	42	1170	M39	1056	1016.0	22	12	10.0	-
1200	1485	48	98	76	-	130	1330	5	-	32	48	1390	M45	1260	1220.0	30	12	12.5	-
1400	1685	52	-	-	-	145	1530	5	-	36	48	1590	M45	1465	1420.0	30	12	14.2	-
1600	1930	58	-	-	-	160	1750	5	-	40	56	1820	M52	1668	1620.0	35	12	16.0	-
1800	2130	62	-	-	-	170	1950	5	-	44	56	2020	M52	1870	1820.0	35	15	17.5	-
2000	2435	66	-	-	-	190	2150	5	-	48	62	2230	M56	2072	2020.0	40	15	20.0	-

* Care should be taken with these sizes as the pipe o.d. does not relate to normal stainless steel dimensions.

1. Weldnecks (code 111) are bored to suit schedule of pipework used.
2. Code 105 flanges are supplied flat faced unless otherwise requested by the purchaser.

BS4504 PN25 Flanges

CODE 111

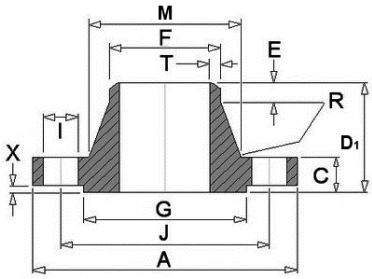

CODE 101

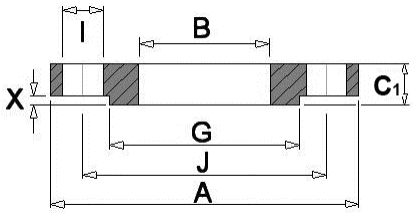

CODE 112

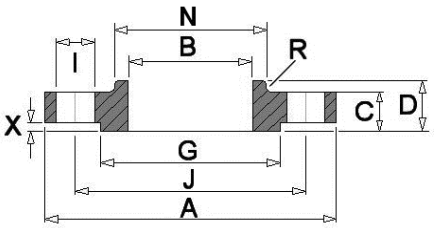

CODE 113

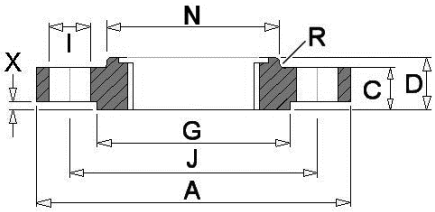

CODE 105

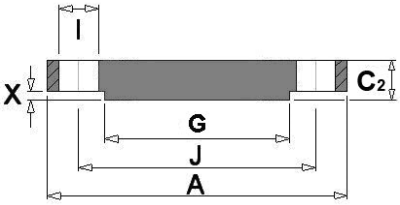

Dimensions in mm

Nom. Size	Flange						Raised Face		Boss	Drilling			Bolting	Neck					Bore Diameter
DN	A	C	C1	C2	D	D1	G	X	N	No.	I	J		M	F	E	R	T	B
10	90	16	14	16	22	35	40	2	30	4	14	60	M12	28	17.2	6	3	1.8	18.0
15	95	16	14	16	22	38	45	2	35	4	14	65	M12	32	21.3	6	3	2.0	22.0
20	105	18	16	18	26	40	58	2	45	4	14	75	M12	40	26.9	6	4	2.3	27.5
25	115	18	16	18	28	40	68	2	52	4	14	85	M12	46	33.7	6	4	2.6	34.5
32	140	18	18	18	30	42	78	2	60	4	18	100	M16	56	42.4	6	5	2.6	43.5
40	150	18	18	18	32	45	88	3	70	4	18	110	M16	64	48.3	7	5	2.6	49.5
50	165	20	20	20	34	48	102	3	84	4	18	125	M16	74	60.3	8	5	2.9	61.5
65	185	22	22	22	38	52	122	3	104	8	18	145	M16	92	76.1	10	6	2.9	77.5
80	200	24	24	24	40	58	138	3	118	8	18	160	M16	110	88.9	12	6	3.2	90.5
100	235	24	26	24	44	65	162	3	145	8	22	190	M20	134	114.3	12	6	3.6	116.0
125	270	26	28	26	48	68	188	3	170	8	26	220	M24	162	139.7	12	6	4.0	141.5
150	300	28	30	28	52	75	218	3	200	8	26	250	M24	190	168.3	12	8	4.5	170.5
200	360	30	32	30	52	80	278	3	256	12	26	310	M24	244	219.1	16	8	6.3	221.5
250	425	32	35	32	60	88	335	3	310	12	30	370	M27	296	273.0	18	10	7.1	276.5
300	485	34	38	34	67	92	395	4	364	16	30	430	M27	350	323.9	18	10	8.0	327.5
350	555	38	42	38	72	100	450	4	418	16	33	490	M30	398	355.6	20	10	8.0	359.5
400	620	40	46	40	78	110	505	4	472	16	36	550	M33	452	406.4	20	10	8.8	411.0
450	670	42	50	44	84	110	555	4	520	20	36	600	M33	500	457.0	20	12	8.8	462.0
500	730	44	56	45	90	125	615	4	580	20	36	660	M33	558	508.0	20	12	10.0	513.5
600	845	46	68	54	100	125	720	5	684	20	39	770	M36	660	610.0	20	12	11.0	616.5
700	960	46	-	-	-	125	820	5	-	24	42	875	M39	760	711.0	20	12	12.5	-
800	1085	50	-	-	-	135	930	5	-	24	48	990	M45	864	813.0	22	12	14.2	-
900	1185	54	-	-	-	145	1030	5	-	28	48	1090	M45	968	914.0	24	12	16.0	-
1000	1320	58	-	-	-	155	1140	5	-	28	56	1210	M52	1070	1016.0	24	12	17.5	-
1200	1530	-	-	-	-	-	1350	5	-	32	56	1420	M52	-	1220.0	-	12	12.5	-
1400	1755	-	-	-	-	-	1560	5	-	36	62	1640	M56	-	1420.0	-	12	14.2	-
1600	1975	-	-	-	-	-	1780	5	-	40	62	1860	M56	-	1620.0	-	12	16.0	-
1800	2185	-	-	-	-	-	1985	5	-	44	70	2070	M64	-	1820.0	-	15	17.5	-
2000	2425	-	-	-	-	-	2210	5	-	48	70	2300	M64	-	2020.0	-	15	20.0	-

* Care should be taken with these sizes as the pipe o.d. does not relate to normal stainless steel dimensions.
1. Weldnecks (code 111) are bored to suit schedule of pipework used.
2. Code 105 flanges are supplied flat faced unless otherwise requested by the purchaser.
3. For information sizes DN10 to DN150 use PN40 dimensions.

BS4504 PN40 Flanges

CODE 111

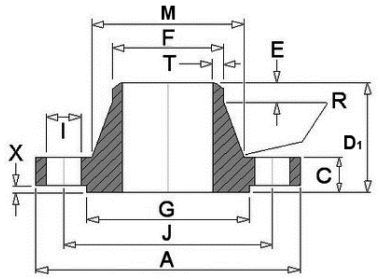

CODE 101

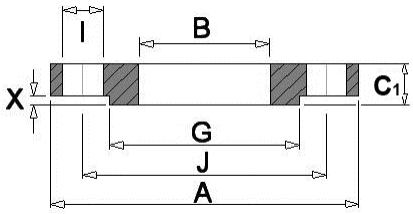

CODE 112

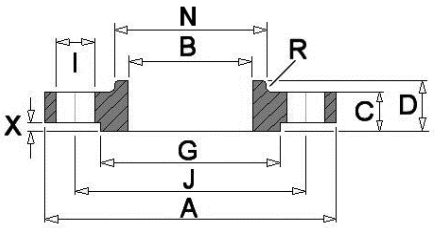

CODE 113

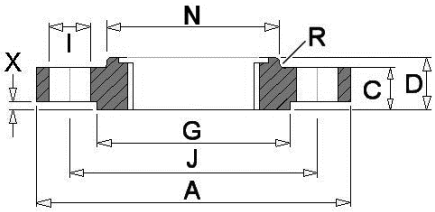

CODE 105

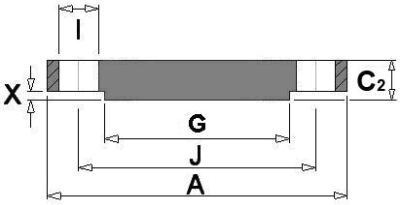

Dimensions in mm

Nom. Size	Flange						Raised Face		Boss	Drilling			Bolting	Neck					Bore Diameter
DN	A	C	C1	C2	D	D1	G	X	N	No.	I	J		M	F	E	R	T	B
10	90	16	14	16	22	35	40	2	30	4	14	60	M12	28	17.2	6	3	1.8	18.0
15	95	16	14	16	22	38	45	2	35	4	14	65	M12	32	21.3	6	3	2.0	22.0
20	105	18	16	18	26	40	58	2	45	4	14	75	M12	40	26.9	6	4	2.3	27.5
25	115	18	16	18	28	40	68	2	52	4	14	85	M12	46	33.7	6	4	2.6	34.5
32	140	18	18	18	30	42	78	2	60	4	18	100	M16	56	42.4	6	5	2.6	43.5
40	150	18	18	18	32	45	88	3	70	4	18	110	M16	64	48.3	7	5	2.6	49.5
50	165	20	20	20	34	48	102	3	84	4	18	125	M16	74	60.3	8	5	2.9	61.5
65	185	22	22	22	38	52	122	3	104	8	18	145	M16	92	76.1	10	6	2.9	77.5
80	200	24	24	24	40	58	138	3	118	8	18	160	M16	110	88.9	12	6	3.2	90.5
100	235	24	26	24	44	65	162	3	145	8	22	190	M20	134	114.3	12	6	3.6	116.0
125	270	26	28	26	48	68	188	3	170	8	26	220	M24	162	139.7	12	6	4.0	141.5
150	300	28	30	28	52	75	218	3	200	8	26	250	M24	190	168.3	12	8	4.5	170.5
200	375	34	36	36	52	88	285	3	260	12	30	320	M27	244	219.1	16	8	6.3	221.5
250	450	38	42	38	60	105	345	3	312	12	33	385	M30	306	273.0	18	10	7.1	276.5
300	515	42	48	42	67	115	410	4	380	16	33	450	M30	362	323.9	18	10	8.0	327.5
350	580	46	54	46	72	125	465	4	424	16	36	510	M33	408	355.6	20	10	8.8	359.5
400	660	50	60	50	78	135	535	4	478	16	39	585	M36	462	406.4	20	10	11.0	411.0
450	685	50	66	54	84	135	560	4	522	20	39	610	M36	500	457.0	20	12	12.5	462.0
500	755	52	72	56	90	140	615	4	576	20	42	670	M39	562	508.0	20	12	14.2	513.5
600	890	60	84	70	100	150	735	5	686	20	48	795	M45	666	610.0	20	12	16.0	616.5

* Care should be taken with these sizes as the pipe o.d. does not relate to normal stainless steel dimensions.
1. Weldnecks (code 111) are bored to suit schedule of pipework used.
2. Code 105 flanges are supplied flat faced unless otherwise requested by the purchaser.